Guide to Public Health Laboratory Services

MDH- Laboratories Administration
The J. Mehsen Joseph Public Health Laboratory
1770 Ashland Avenue, Baltimore MD 21205
Telephone: 443-681-3800 Fax: 443-681-4501
https://health.maryland.gov/laboratories/Pages/home.aspx

March 2023

TABLE OF CONTENTS **PAGE**

LETTER from the DIRECTOR 3

GENERAL ORGANIZATION OF THE LABORATORIES ADMINISTRATION 4

MAP of STATE CENTER COMPLEX in BALTIMORE 6

A. GENERAL INFORMATION 7

CENTRAL LABORATORY 7

REGIONAL LABORATORIES 7

COURIER SERVICE 8

SPECIMEN REJECTION POLICY 8

BILLING 8

B. SPECIMEN SUPPLIES, PACKAGING, TRANSPORT, and DELIVERY 8

PACKAGING FOR TRANSPORT 8

TEST COLLECTION COMPONENTS AND SUPPLIES 8

BASIC TRIPLE PACKAGING 9

DELIVERY/DROP-OFF TO CENTRAL LAB 11

C. SPECIMEN COLLECTION, PREPARATION, AND HANDLING 12

GENERAL 12

PROCUREMENT AND SUBMISSION REQUIREMENTS,

PRECAUTIONS, and PROBLEMS by SPECIMEN TYPE 13

ENTOMOLOGICAL SPECIMENS 14

RABIES SPECIMENS 15

D. GUIDE TO PUBLIC HEALTH LABORATORY TESTS 17

E. GUIDE TO INTERPRETATION OF RETROVIROLOGY SEROLOGICAL TESTS 123

F. GUIDE TO INTERPRETATION OF HEREDITARY DISORDERS 123

TESTS 123

GUIDE TO INTERPRETATION OF METABOLIC DISORDERS 127

CLINICAL AND HEMOTOLOGIC ASPECTS OF SOME HEMOGLOBINOPATHIES 128

COMPARISON OF IRON-DEFICIENCY ANEMIA AND THALASSEMIA 129

G. COMMON VIRAL AND RICKETTSIAL CLINICAL SYNDROMES 129

H. DIRECTORY OF LOCAL HEALTH DEPARTMENTS 134

I. ACRONYMS 136

Maryland
DEPARTMENT OF HEALTH

Wes Moore, Governor · Aruna Miller, Lt. Governor · Laura Herrera Scott, M.D., M.P.H., Secretary

Laboratories Administration
Robert A. Myers, Ph.D., Director
1770 Ashland Avenue
Baltimore, Maryland 21205

March 3, 2023

Dear Health Professionals:

This reference guide lists public health laboratory services available to health officers, physicians, and other health professionals to assist in the prevention, diagnosis, and control of human diseases. The listing of laboratory services is arranged alphabetically by test and includes contact information for the laboratory that performs the test.

Specimens and samples submitted to the central and regional laboratories should be collected and submitted in special kits provided by the Laboratories Administration. These kits may also be obtained from the regional laboratories or county health departments. Use of these kits assures collection of the proper type of specimen, preservation of specimen integrity, proper demographic/epidemiological information, and prompt distribution for examination when received in the laboratory.

Records of patient information and test results are treated as confidential information and will be released only to the submitting physician or other legally authorized individual.

Public Health professionals and physicians using the Administration's services are invited to visit the central laboratory in Baltimore or their regional laboratory. A few minutes spent in the laboratory can often result in clarification of points regarding types of tests performed, specimen kits available, and many other points' important to effective use of laboratory services. This personal contact not only improves services but also can be informative to the physician and stimulating to the laboratorian in supporting the practice of modern scientific medicine.

The most up-to-date version of this guide is available for downloading and printing off the internet at:
https://health.maryland.gov/laboratories/Pages/home.aspx

Robert A. Myers, Ph.D.
Director

GENERAL ORGANIZATION OF THE LABORATORIES ADMINISTRATION

REGISTRATION & LABORATORY REPORTS 443-681-3820
SPECIMEN ACCESSIONING LABORATORY 443-681-3793/443-681-3842
SPECIMEN KIT PREPARATION UNIT 443-681-3777

OFFICE OF FISCAL ADMINISTRATION: Fax# 443-681-4503
BILLING OFFICE 443-681-3812
PROCUREMENT OFFICE 443-681-3813

OFFICES OF LABORATORY QUALITY ASSURANCE, SAFETY, and TRAINING: Fax# 443-681-4503
QUALITY ASSURANCE OFFICER 443-681-3791
TRAINING COORDINATOR 443-681-3792
OFFICE OF SAFETY AND SECURITY 443-681-3792

DIVISION OF PUBLIC HEALTH MICROBIOLOGY: Fax# 443-681-4506
DIVISION CHIEF 443-681-3951
ACUTE BACTERIAL CORE (ABC) SURVEILLANCE LABORATORY..... 443-681-4575
BIOTERRORISM LABORATORY 443-681-3788/443-681-3789
CLINICAL MICROBIOLOGY..... 443-681-3952/443-681-3953
ENTERIC BACTERIOLOGY 443-681-4570
GC 443-681-3952/443-681-3953
MYCOBACTERIOLOGY (TB)..... 443-681-3942/443-681-3950
MYCOLOGY 443-681-4569
PARASITOLOGY 443-681-3952/443-681-3953

DIVISION OF MOLECULAR BIOLOGY: Fax # 443-681-4504 - Molecular Epi., Viral Disease Assess., Core Seq. and Retrovirology Fax# 443-681-3899 Molecular Diagnostics
DIVISION CHIEF 443-681-3800
CORE SEQUENCING LABORATORY..... 443-681-3874
MOLECULAR DIAGNOSTICS LABORATORY..... 443-681-3924
MOLECULAR EPIDEMIOLOGY LABORATORY..... 443-681-3879
RETROVIROLOGY LABORATORY..... 443-681-3877
VIRAL DISEASE ASSESSMENT LABORATORY 443-681-3878

DIVISION OF NEWBORN AND CHILDHOOD LABORATORY SCREENING: Fax# 443-681-4505
DIVISION CHIEF 443-681-3900
DIVISION MANAGER 443-681-3901f
NEWBORN SCREENING:
BIOCHEMICALS 443-681-3913
ENDOCRINOLOGY 443-681-3913/443-681-3912
HEMOGLOBINOPATHIES..... 443-681-3913
SEVERE COMBINED IMMUNODEFICIENCY DISEASE (SCID)..... 443-681-3915
TANDEM MASS SPECTROMETRY 443-681-4590/443-681-3910

DIVISION OF VIROLOGY and IMMUNOLOGY: Fax # 443-681-3844
DIVISION CHIEF 443-681-3930
ARBOVIRUS SEROLOGY..... 443-681-3936
CHLAMYDIA 443-681-3937
HEPATITIS..... 443-681-3889
MICROBIAL SEROLOGY 443-681-3938
RABIES & ZOONOTIC DISEASES..... 443-681-3772
SYPHILLIS & TREPONEMAL SEROLOGY 443-681-3938
VACCINE PREVENTABLE DISEASES..... 443-681-3889
VIRUS ISOLATION..... 443-681-3934

OFFICE OF LABORATORY EMERGENCY PREPAREDNESS and RESPONSE: Fax# 443-681-4509

BIOTERRORISM CHIEF 443-681-3787

BIOTERRORISM COORDINATOR..... 443-681-3788

BIOLOGICAL AGENTS REGISTRY (BAR) PROGRAM 443-681-3789

DIVISION OF ENVIRONMENTAL SCIENCES: Fax# 443-681-4507

[Refer to "Guide to Environmental Laboratory Services" for information on environmental testing in this division]

DIVISION CHIEF 443-681-3852

CHEMICAL EMERGENCY PREPAREDNESS AND RESPONSE 443-681-3857

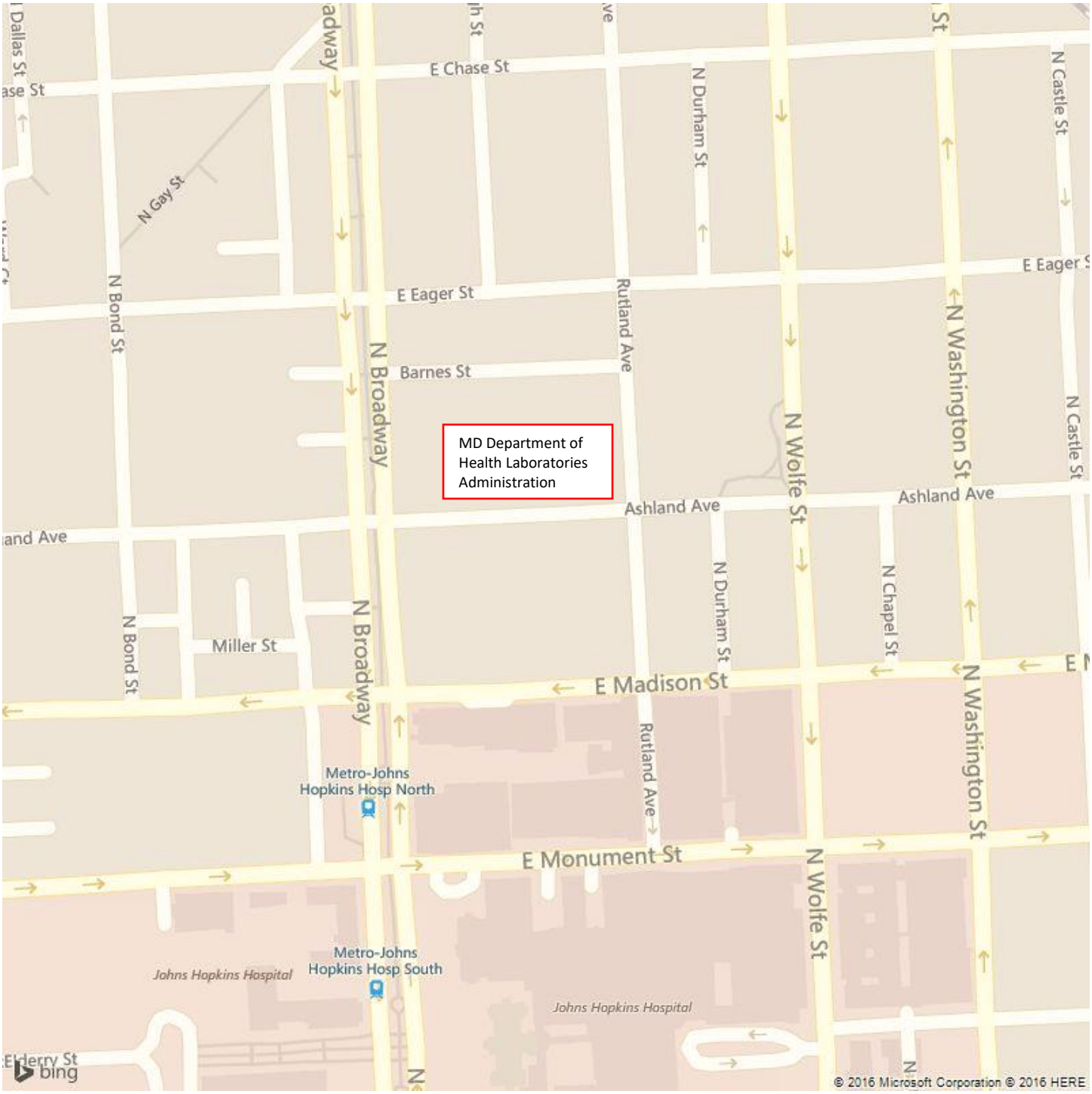
E Chase St
N Durham St
N Castle St
N Gay St
E Eager St
N Bond St
Rutland Ave
N Broadway
Barnes St
N Wolfe St
N Washington St
MD Department of Health Laboratories Administration
Ashland Ave
N Chapel St
Miller St
E Madison St
Metro-Johns Hopkins Hosp North
E Monument St
Metro-Johns Hopkins Hosp South
Johns Hopkins Hospital
Johns Hopkins Hospital
© 2016 Microsoft Corporation © 2016 HERE

A. GENERAL INFORMATION

A.1. CENTRAL LABORATORY

Hours: Monday thru Friday 8:00 a.m. – 4:30 p.m.
Saturday 7:30 a.m. – 12:00 p.m. Sunday Closed
Location: 1770 Ashland Avenue
Baltimore, MD 21205
Mailing Address: Laboratories Administration
P.O. Box 2355
Baltimore, MD 21203-2355

NON-EMERGENCY NUMBERS:

DIRECTOR'S OFFICE 443-681-3800
CENTRAL LABORATORY FAX 443-681-4501
REGISTRATION and LABORATORY REPORTS 443-681-3820
SPECIMEN ACCESSIONING LABORATORY..... 443-681-3793/443-681-3842

24-HOUR EMERGENCY NUMBERS:

ANIMAL RABIES EMERGENCY EXAMINATION REQUESTS (See page 16)

NON-RABIES CASES

LABORATORY EMERGENCY PREPAREDNESS
AND RESPONSE CELL PHONE: 410-925-3121

DIRECTOR'S EMERGENCY CELL PHONE:
DR. ROBERT MYERS..... 443-928-0925

A.2. REGIONAL PUBLIC HEALTH LABORATORIES HOURS AND LOCATIONS

A.2.a. EASTERN SHORE REGIONAL LABORATORY (ESRL-Salisbury):

Hours: Monday thru Friday 8:00 a.m. – 4:30 p.m.
Saturday/Sunday Closed
Location: 926 Snow Hill Road-Cottage 500
Salisbury, MD 21804-1939
Director, Robert A. Myers, Ph.D..... 443-928-0925
ESRL Office 410-219-9005
ESRL FAX..... 410-749-1173

24-HOUR EMERGENCY NUMBER: 443-523-5056 (cell-Primary)
443-928-0925 (cell-Backup)

A.2.b. WESTERN MARYLAND REGIONAL LABORATORY (WMRL – Cumberland):

Hours: Monday thru Friday 8:00 a.m. – 4:30 p.m.
Saturday/Sunday Closed
Location: 12503 Willowbrook Road
The Brook Building, Entrance #6
Cumberland, MD 21502
Director, Robert A. Myers, Ph.D..... 443-928-0925
WMRL Office 301-759-5115
WMRL FAX 301-777-2021

24-HOUR EMERGENCY NUMBER: 301-268-4468 (cell)

A.3. COURIER SERVICE

The Laboratories Administration contracts to provide specimen courier service for many local health departments. Problems concerning the courier service should be reported immediately by calling 443-681-3820.

A.4. SPECIMEN REJECTION POLICY

The Laboratories Administration's "Specimen/Sample Acceptance and Rejection Criteria" policy helps to assure the accuracy, reliability, and timeliness of laboratory test results by eliminating the testing of unacceptable specimens. When the laboratory determines that a specimen is unacceptable for testing, the laboratory, whenever feasible, notifies the submitter immediately by telephone, confirms the notification in writing, and temporarily retains the specimen for possible future testing (e.g., in cases where additional information provided by the submitter would make the specimen acceptable for testing).

A.5. BILLING

Questions concerning client billing, laboratory billing, and laboratory reimbursement by the Maryland Medical Assistance Program or other third party payer should be directed to the Head of the Laboratory Administration's Billing Unit by telephoning 443-681-3810.

B. SPECIMEN SUPPLIES, PACKAGING, TRANSPORT, AND DELIVERY

B.1. PACKAGING FOR TRANSPORT:

Care must be taken to ensure a proper transport environment for specimens. Collect recommended quantities of test specimen and follow all directions for recording date and, where appropriate, time of specimen collection. Also make every effort to see that specimens are transported at required temperatures and in appropriate collection containers. Collection containers and other specimen supplies are available from the Laboratory's Supply Unit (443-681-3777). In addition, always separate glass tubes by using either protective material or separate biohazard bags to prevent breakage and cross-contamination during transport (see Basic Triple Packaging on page 10). A submitter using a courier service should take similar precautions by submitting individual tubes and requisition slips in separate, sealable plastic biohazard bags protected in an appropriate shipping container.

TEST COLLECTION COMPONENTS AND OTHER LABORATORY SUPPLIES:

The Laboratories Administration provides test request forms and specimen collection components (e.g., tubes, bags, etc.). Questions about supplies should be directed to the nearest Regional Laboratory or the Central Laboratory Supplies Unit at 443-681-3777 or email mdhlabs.outfits@maryland.gov . To obtain the electronic fillable "Testing Supplies Order Form" visit our website at:

https://health.maryland.gov/laboratories/docs/Outfit%20Supply%20Requisition%202019%20Fillable%20Form%201019%20(1).pdf

Fax the completed "Testing Supplies Order Form" to 443-681-3850 or email mdhlabs.outfits@maryland.gov.

For newborn screening collection devices call 443-681-3900 or email mdphl.nbs@maryland.gov.

For newborn screening collection cards visit our website: https://health.maryland.gov/laboratories/Pages/Newborn-Screening.aspx.

Note that various tests and specimens require different types of collection devices, transport media, and transport containers. Using the incorrect kit, collection component, or container will often render a test specimen unacceptable for analysis. If you have a question regarding the acceptable collection container contact the testing laboratory.

B.1.a. VIA STATE CONTRACTED COURIER

Counties using the state contracted courier service must pack specimens and/or samples according to the temperature storage requirements. Specimens requiring freezing should be frozen and packed with adequate cooling (dry ice) material to maintain their proper temperature for up to 36 hours. Coolers are required to transport all specimens and/or samples through the state contracted courier. Therefore, it is essential that all coolers be properly labeled. Each cooler should specify the conditions for storage on all visible outer surfaces – "ROOM TEMPERATURE", "REFRIGERATE", or "FREEZE". Each cooler for specific laboratories should be labeled on all visible outer surfaces for "ENVIRONMENTAL" or "RABIES". Both Environmental and Rabies coolers must only be used as labeled. **DO NOT use or re-use Environmental or Rabies coolers for any other types of specimens/samples, or add any other types of specimens to these coolers. A "RABIES" cooler must only be used for rabies samples, and an "ENVIRONMENTAL" cooler must only be used for environmental specimens.** Specimens/samples that are received in an Environmental or Rabies cooler that are not intended for Environmental or Rabies testing will be rejected and discarded for safety reasons. (Please see Rabies Section on page 15 for detailed information on animal rabies submissions).

B. 1. b. VIA U.S. MAIL OR OTHER CARRIER:

Due to regulations published by IATA (International Air Transportation Association), US DOT (United States Department of Transportation), and the USPS (United States Postal Service), the Laboratories Administration's specimen collection components may be used only when sending specimens via private or state-contracted courier. These containers are not approved or certified for use in the USPS system or other common carriers (e.g., FedEx, UPS, etc.). Infectious substances sent through the mail or by other common carriers must be packaged by individuals trained and certified in Infectious Substances shipping. **Certified packaging systems are not supplied by the Laboratories Administration.**

Before using the USPS or other carrier, the shipper must refer to the current IATA, USPS and DOT regulations. IATA has divided infectious substances into two categories. IATA "Category A Infectious Substance" includes substances that are "transported in a form that, when exposure to it occurs, is capable of causing permanent disability, life-threatening or fatal disease in otherwise healthy humans or animals." "Category A Infectious Substances" are subject to the more stringent packing requirements described in IATA Packing Instruction 602. An IATA "Category B Infectious Substance" is defined as "an infectious substance that does not meet the criteria for inclusion in Category A." The proper shipping name of UN 3373 is Biological substance Category B. This includes human or animal material transported for research, diagnosis, disease treatment, etc., and diagnostic or clinical cultures. These specimens must be mailed and transported in packaging that meets IATA Packing Instruction 650.

BASIC TRIPLE PACKAGING (Refer to tests for specific details)

Basic triple packaging systems include a primary receptacle such as a tube with adhesive tape around the screw cap or a plate with parafilm around the edges. The primary (1°) receptacle, along with required absorbent and cushioning material, is placed inside a secondary (2°) container. The 2° container for diagnostic specimens should be a sealed biohazard or Ziploc bag. The 2° container is then securely placed within an outer shipping container (tertiary (3°) container), generally a corrugated cardboard box with cushioning material inside to surround the 2° container. This outermost container bears the name, address, and telephone number of shipper, name of person responsible with 24/7 telephone number, and the complete name, shipping address, and telephone number of the recipient, plus all the required markings. Include an itemized list of contents in a sealed plastic bag, placed between the 3° and 2° containers. Specific instructions for various tests can be found in the test list section of this guide.

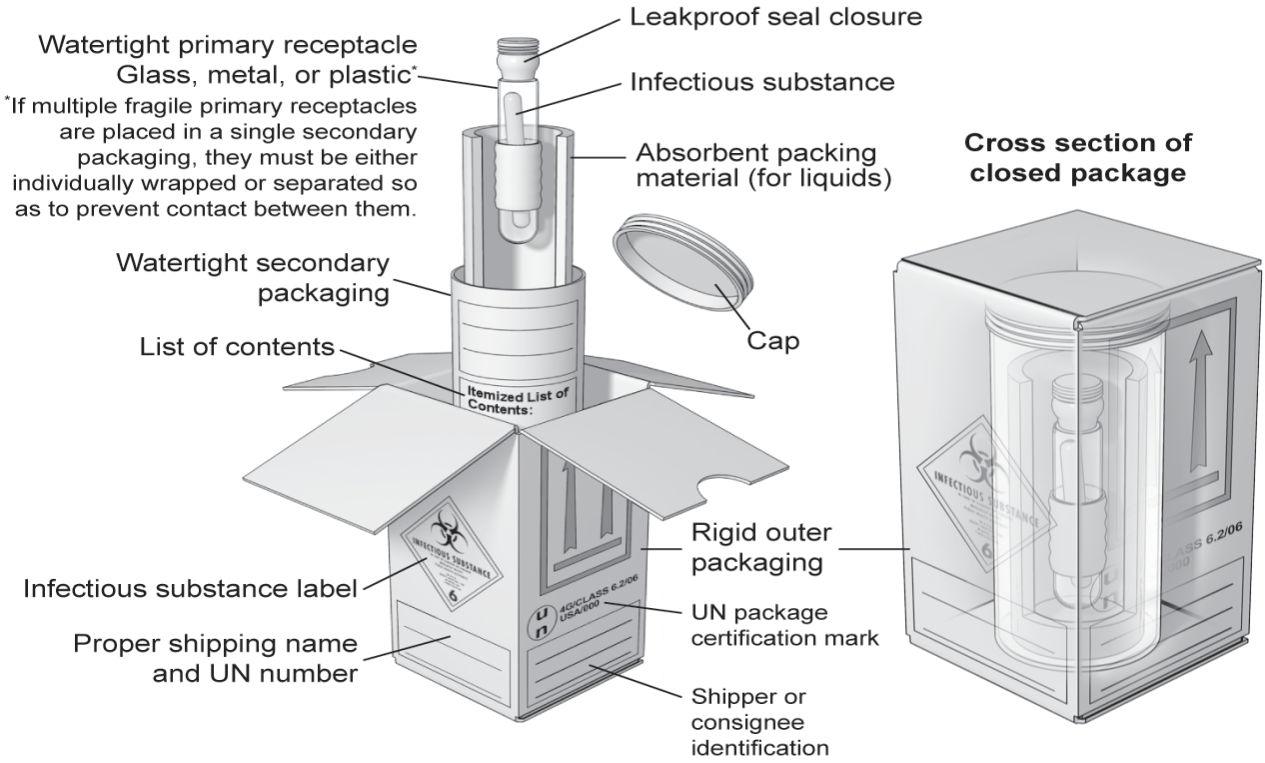

Example of a correctly prepared and labeled triple package for Biological specimen, Category B (UN 3373) (previously known as Clinical specimen and Diagnostic Specimen. A Category B infectious substance is one that does not meet the criteria for inclusion in Category A. A Category B infectious substance does not cause permanent disability or life-threatening or fatal disease to humans or animals when exposure to it occurs. The proper shipping name for a Category B infectious substance, "Biological specimen, Category B," is assigned to identification number "UN 3373." The proper shipping names "Diagnostic specimen" and "Clinical specimen" may no longer be used (as of January 1, 2007). (Modified from Biosafety in Microbiological and Biomedical Laboratories [BMBL], 5th edition)

BASIC TRIPLE PACKAGING:

1) A watertight primary receptacle.
2) A watertight secondary receptacle.
3) An outer packaging of adequate strength for its capacity, mass and intended use.

Note: For a liquid specimen, absorbent material must be placed between the primary and secondary containers and be capable of absorbing the entire contents of the primary receptacle(s).

Certified packaging systems are designed to withstand specific pressure changes and drop tests. Packaging systems that meet the packing instruction standards are currently available from vendors specializing in products certified to meet the IATA, USPS, and other carriers' requirements. Packaging systems using fiberboard or aluminum canisters, zip-lock bags, or other uncertified components may not be in compliance.

IT IS THE RESPONSIBILITY OF THE SHIPPER TO COMPLY WITH ALL LAWS AND REGULATIONS REGARDING THE SHIPPING OF INFECTIOUS SUBSTANCES.

Questions may be referred to the MD Department of Health Laboratories Administration's Quality Assurance Officer, Heather Peters, by calling 443-681-3791 or by email heather.peters@maryland.gov.

Resources:
http://www.cdc.gov/biosafety/publications/bmbl5/
http://www.usps.com/

B.2. DELIVERY/DROP-OFF TO CENTRAL LABORATORY

Specimens intended for the Central Laboratory should be directed to 1770 Ashland Avenue Baltimore, MD 21205. The Laboratory facility is located at the corner of Ashland and Rutland Avenues. All specimen and sample deliveries to the laboratory must be delivered to the loading dock located on Rutland Avenue. Temporary parking is available at the loading dock. Couriers delivering specimens are required to sign a loading dock security log sheet upon arrival.

B.2.a. Specimen/Sample Deliveries Accepted

Clinical
Monday-Friday 8:00am-6:00pm
Saturday: 7:30am-12:00pm

Newborn Screening
Monday-Friday 8:00am-6:30pm
Saturday: 7:30am-2:00pm

Rabies specimens and testing: Contact Rabies on-call staff (see page 15).

B.2.b. HOLIDAYS

A detailed holiday schedule can be found on the Laboratories Administration website at https://health.maryland.gov/laboratories/docs/Rev.%202023%20HOLIDAY%20SCHEDULE.pdf

B.2.c. OTHER EMERGENCY REQUESTS INVOLVING DROP OFF OR LABORATORY SERVICES

Emergency on-call numbers:

(1.) Biological, chemical or radiological terrorism:

Amy Armitage/Emergency On Call Phone .....410-925-3121 (cell)

Robert Myers ..... 443-928-0925 (cell)

(2.) Microbiology emergency:

Robert Myers ..... 443-928-0925 (cell)

(3.) Environmental Sciences emergency:

Sinisa Urban ..... 410-598-7355 (cell)

For unknown powders and environmental samples for bioterrorism/chemical terrorism see the Laboratories Administration website at https://health.maryland.gov/laboratories/Pages/home.aspx or call a phone number under B.2.c.(1.), above.

C. SPECIMEN COLLECTION, PREPARATION, AND HANDLING

C.1. GENERAL

Specimen quality is a product of the nature of the specimen itself, how well it was collected, and the manner in which it is or was transported to the laboratory. A laboratory can provide accurate and clinically relevant test results only if it receives good test specimens. Before attempting to collect a specimen, look up the desired test(s) in this reference guide. Check to see if there are specific requirements for:

1. Specimen type or volume;

2. Collecting procedures;

3. Collecting devices or containers.

Use the correct test request form and properly and legibly complete this form to ensure accurate and efficient laboratory service. Use a soft pencil or black ballpoint to print the information. Be sure to include proper identifying information on the test request form and the specimen itself.

Please note the clinic's full mailing address, test request authorized by personnel, and telephone number to assure proper return of test results. Then see that the test request form accompanies the specimen. The following sections provide practical guidelines to physicians, nurses, and other non-laboratory health personnel who must routinely collect and submit clinical specimens to one of the State's public health laboratories (i.e., MD Department of Health Laboratories Administration).

C.1.a. PATIENT PREPARATION

Prior to the time scheduled to collect a patient's specimen the patient should receive appropriate instructions concerning fasting, diet, and medication restriction. For example, a patient about to submit a specimen for a microbiology culture should have specimen(s) collected before starting antimicrobial therapy.

C.1.b. SPECIMEN HANDLING BY SUBMITTER

The most common specimen handling errors include failing to:

1. Tighten specimen container lids or caps;

2. Label a specimen correctly; and

3. Provide all pertinent clinical information.

Properly identifying specimens is extremely important. Legibly label each specimen container or tube with the patient's full name, and date of specimen collection, just as they appear on the test request form. Information on specimens should be checked against information on the test request form for agreement before the specimen is sent to the laboratory.

C.2. PROCUREMENT AND SUBMISSION REQUIREMENTS, PRECAUTIONS, AND PROBLEMS BY SPECIMEN TYPE

C.2.a. BLOOD/SERUM

C.2.a.(1.) HEMOLYSIS

In general, grossly or even moderately hemolyzed blood specimens may not be acceptable for testing. Hemolyzed serum is pink or red, rather than the normal clear straw color. Most cases of hemolysis can be avoided by observing the steps below.

1. Use a needle no smaller than 20- or 21- gauge. (On occasion, however, it may be necessary to use a 22- or 23- gauge needle for patients from elderly and pediatric populations with small or difficult veins.) Hemolysis can be avoided by not placing small gauge Butterfly needles into Vacutainer tubes. Carefully and safely remove Butterfly and replace with a 16-gauge needle before penetrating Vacutainer tube.

2. If there is air leakage around the needle or loss of vacuum in the tube, replace the vacuum tube.

3. Collect blood in room temperature containers unless the specimen requirement specifies otherwise.

4. When a vacuum tube fills too slowly due to an incomplete venipuncture, damage to the red blood cells may result. Correct by deeper vein entry or select another puncture site and collect a second specimen.

5. Do not remove the needle from the vein until the vacuum tube is completely filled or the tube is pulled back from holder to release pressure. Premature removal causes a rush of air to enter the tube, with resultant damage to the red cells.

C.2.a.(2.) PAIRED SERA/PARALLEL TESTING

Both acute and convalescent sera are required to determine recent infection. Acute sera may be tested immediately and then stored until the convalescent sera are submitted. When both sera are available parallel testing under identical testing conditions will be performed to ensure an accurate comparison of acute and convalescent antibody titers. See Submission of Specimen for requested serological test.

C.2.a.(3.) VACUUM TUBES CONTAINING ANTICOAGULANTS

When using vacuum tubes containing anticoagulants and preservatives:

1. Tap the tube gently at a point just below the stopper to release any additive adhering to the tube or stopper.

2. Permit the tube to fill completely to ensure the proper ratio of blood to additive.

3. To ensure adequate mixing of blood with the anticoagulant or preservative, use a slow rolling wrist motion to invert the tube gently five or six times. Rapid wrist motion or vigorous shaking contributes either to small clot formation or hemolysis and fails to initiate proper mixing action.

4. Check to see that all the preservative or anticoagulant is dissolved. If any preservative powder is visible, continue inverting the tube slowly until the powder is dissolved.

C.2.a.(4.) VACUUM TUBES WITHOUT ANTICOAGULANTS

When using vacuum tubes containing no anticoagulants or preservatives, or SST serum Separator Tubes:

1. Permit the tube to fill completely.

2. Let the specimen stand for a minimum of 30 minutes and not longer than 45 minutes prior to centrifugation. This allows time for the clot to form. If the specimen is allowed to stand longer than 45 minutes, chemical activity and degeneration of the cells within the tube will take place, and test results will be altered as a consequence.

3. Centrifuge the specimen at the end of the 30 to 45 minute period in strict accordance with manufacturer's instructions for speed and duration of centrifugation.

C.2.a.(5.) QUANTITY NOT SUFFICIENT (QNS)

One of the most common errors in specimen collection is the submission of an insufficient quantity of specimen for testing. To ensure an adequate amount of specimen:

1. Always draw whole blood in an amount 2 ½ times the required volume of serum needed for a particular test. For example, if 4mL serum are required, draw at least 10mL whole blood.

2. For most profile testing submit one full tube of serum (8-10mL).

C.2.b. ENTOMOLOGICAL SPECIMENS

Identification of insects and other ectoparasites of medical importance (e.g., ticks, bed bugs, etc.) can be provided as a referral service. Please call the Microbiology Division (443-681-3943/443-681-3952) prior to submitting insect specimens.

C.2.c. RABIES SPECIMENS

C.2.c.(1.) HOURS OF OPERATION

The MD Department of Health Laboratories Administration Rabies Laboratory operates from 8:00 AM to 4:30 PM weekdays (Monday through Friday except on holidays. On-call laboratory scientists are available for requests that require test results as soon as possible so that a medical determination on rabies post-exposure prophylaxis (PEP) can be made.

Specimens must be received at the MD Department of Health Laboratories Administration by 12:00 PM on Fridays to have the test results reported by Friday 4:30 PM. Specimens received on Fridays after 12:00 PM will have the results ready the next regular workday.

Specimens received on evenings from Monday through Friday, Fridays from 12:00 PM to 4:30 PM, on a weekend, or on a State holiday will be processed on the next regular workday, except for situations that require test results as soon as possible so that a medical determination about rabies PEP can be made (emergency examination). In these situations, prior approval by epidemiology staff in the MD Department of Health Office of Infectious Disease Epidemiology and Outbreak Response (IDEOR) is necessary before testing will be initiated by on-call laboratory scientists. (For details, please see the Emergency Examination Requests section below).

C.2.c.(2.) DELIVERY PROCEDURES

Delivery of specimens must be from Monday through Friday 7:30AM to 6:00PM (regular workdays) to the MD Department of Health Laboratories Administration Loading Dock at 1770 Ashland Ave Baltimore, Maryland 21205. All animal submission of specimen must be routed through the local health department and sent via courier service**.** **Do not use** the U.S. Postal Service or other public transportation service to send specimens. (For emergency examination situations, please see the Emergency Examination Requests section below).

C.2.c.(3.) ORDERING TESTS

For routine testing Monday through Friday, all local health departments must use the MD Department of Health Laboratories Administration's MyLIMS (Laboratory Information Management Systems) https://starlims3.health.maryland.gov/starlims11.MDlabs.prod/ for submission of specimens. The updated rabies submission form (DHMH 1188 08/17) will print out automatically when the animal rabies test is ordered through the MyLIMS system, and must be included in the cooler and attached to the specimen being submitted. One Rabies Submission Form should accompany each animal submitted. Specimens approved for emergency testing must be accompanied by a fully completed handwritten Rabies Submission Form if access to MyLIMS is not possible. An emergency contact name and phone number must be listed on the Rabies Submission Form. The updated rabies submission form (DHMH 1188 08/17) can be downloaded from our website at.

https://health.maryland.gov/laboratories/Pages/Rabies.aspx

C.2.c.(4.) CRITERIA FOR ANIMAL SUBMISSION

Live animals will **NOT** be accepted in the laboratory. Terrestrial animals acceptable for submission to the MD Department of Health are rabies vector species (e.g., raccoons, foxes, skunks, etc.) that expose humans, livestock, or pets. Exposure is defined as a bite that breaks the skin or contact of mucous membranes or broken skin with either animal saliva or nervous tissue. Birds, fish, reptiles and amphibians will not be accepted for rabies testing under any circumstances. Small rodents, including squirrels, chipmunks, gerbils, guinea pigs, hamsters, rabbits, mice, rats, voles, shrews and moles, will not be accepted for testing unless (1) the animal has bitten a human and (2) prior approval for testing has been authorized by the MD Department of Health IDEOR epidemiology staff. Most recent human cases of rabies in the U.S. have been associated with bats, and bat bites may be difficult to recognize. Bats should be submitted for testing in all cases of direct human contact with a bat or when bite or mucous membrane contact cannot be ruled out. Live animals will **NOT** be accepted in the laboratory.
Please Note: Large animal heads (e.g. horse and cow) should be submitted to the Maryland Department of Agriculture for brain tissue extraction.

C.2.c.(5.) EMERGENCY EXAMINATION REQUESTS

Some situations that occur after regular business hours may require rabies test results as soon as possible so that a medical determination about rabies PEP can be made. In these Situations, on-call laboratory scientists are available; and specimens may be examined Fridays from 12:00 PM to 4:30 PM, on a weekend, or on a State holiday, with prior approval of the MD Department of Health PHPA (Prevention and Health Promotion Administration) epidemiology staff. To reach the epidemiology staff during regular business hours, contact the MD Department of Health PHPA for Zoonotic and Vector-borne Diseases (CZVBD) at 410-767-5649 (main); 410-767-6703 (MD Department of Health State Public Health Veterinarian); or 410-767-6618 (CZVBD) Rabies Chief). After hours, use the MD Department of Health IDEORB (Infectious Disease Epidemiology and Outbreak Response Bureau) Epidemiologist-On-Call pager at 410-716-8194 or call the SYSCOM operator at 410-795-7365 and ask to be directed to the Epidemiologist-on-Call for all rabies consultations.

After receiving approval for an emergency examination request, contact one of the following MD Department of Health Laboratories Administration staff **(in the order listed below)** to arrange for testing and appropriate submission. (NOTE In addition to the rabies submission form, the specimen should be accompanied by the submitter's after-hours contact information to receive results).

1) **Rabies Lab On-Call No: 443-735-1291**
2) Rabies Lab Supervisor (Kenneth Okogi): 443-799-9490
3) OLEPR Chief (Amy Armitage): 410-925-3121
4) Laboratory Director, Dr. Robert Myers: 443-928-0925

C.2.c.(6.) SPECIMEN COLLECTION

Live animals will **NOT** be accepted in the laboratory. Animals should be euthanized in a manner that will not destroy the brain tissues to be examined in the diagnosis of rabies. When possible, only the animal's head should be submitted for diagnostic purposes. For animals weighing more than 20 pounds, particularly large dogs, only the head may be submitted for testing. If an animal is being submitted to MD Department of Health Labs from an animal pathology or diagnostic laboratory, and the animal has already been prepared for necropsy, the submitter should submit all or a cross section of the brainstem and half of the cerebrum.

Please Note: Large animal heads (e.g. horse and cow) should be submitted to the Maryland Department of Agriculture for brain tissue extraction.

C.2.c.(7.) PACKAGING AND SHIPPING

•All rabies specimens must be placed into coolers that are clearly marked as rabies coolers. No other non-rabies clinical samples may be placed into rabies coolers or these samples will be rejected.

•Rabies coolers must fully close and must be waterproof.

•Each specimen must be individually packaged in a leak-proof bag and clearly labeled.

•Each specimen must be accompanied by a Rabies Submission Form for proper identification.

•All Rabies Submission Forms must be filled out correctly and legibly including exposure type.

•Coolers may be shipped with ice or ice packs but the ice should not occupy more than 1/3 of the cooler.

• Live animals will **NOT** be accepted in the laboratory.

•Submitters should avoid freezing specimens. If frozen specimens are received, testing will be delayed.

• Trash **MUST** not be sent in rabies coolers.

•Animal rabies packaging and training video available at https://health.maryland.gov/laboratories/Pages/Rabies-Animal-DFA.aspx

D. GUIDE TO PUBLIC HEALTH LABORATORY TESTS:

TEST:	**ABCs (previously BIDS)** includes *Neisseria meningitidis*, *Haemophilus influenzae*, Group A streptococcus, Group B Streptococcus, and *Streptococcus pneumoniae*. *Listeria monocytogenes* is handled as an ABCs isolate and evaluated by the National Antimicrobial Resistance Monitoring Systems (NARMS) Program.
Synonym:	Active Bacterial Core Surveillance (Bacterial Invasive Disease Surveillance)
Laboratory/Phone:	Microbiology / 443-681-3952
Turnaround Time:	N/A
Specimen Required:	Pure culture on agar slant in screw cap tube.
Specimen Identification:	Specimen should be labeled with patient's last and first name, patient's address, DOB, specimen type/source, and the date and time of collection. The specimen/sample must be properly labeled and match the test requisition or electronic test order.
Specimen Volume (Optimum):	Bacterial isolate
Specimen Volume (Minimum):	N/A
Collect:	N/A
Form:	MDH Form #4676 Infectious Agents: Culture/Detection (Order Forms: 443-681-3777 or form may be downloaded from MDH Laboratory website). **Indicate ABCs # and organism identification on test request form.** **Indicate specimen type using the "Specimen Code" on form.**
Packaging and Shipping*:	Specimens must be packaged in a triple packaging system to ensure that under normal conditions of transport they cannot break, be punctured or leak their contents (Refer to pages 9 & 10 for triple packing guidance). ***Refer to current Federal regulations for specific shipping requirements.**
Transport Conditions:	AT ROOM TEMPERATURE - DO NOT REFRIGERATE ISOLATE - DO NOT FREEZE.
Specimen Rejection Criteria:	The following rejection criteria are designed to prevent the reporting of inaccurate results and to avoid misleading information that might lead to misdiagnosis and inappropriate therapy. A request for a new specimen will provide appropriate materials and clinically relevant information to support good patient care. ▪ Unlabeled or improperly labeled specimen ▪ Non-sterile or leaking container ▪ Inappropriate specimen transport conditions ▪ Illegible, or no submitter information on the request form ▪ Mismatched form and specimen ▪ Broken specimen/sample container ▪ The wrong specimen for test request ▪ Inappropriate outfit for requested test ▪ Illegible or no patient information on the specimen ▪ Expired transport media ▪ Specimen frozen
Availability:	Monday through Friday
Results and Interpretation:	N/A
Reference Range:	N/A
Additional Information:	SUBCULTURE TO AGAR SLANT BEFORE TRANSPORTING. DO NOT SEND CULTURE PLATES.
Purpose of Test:	Active Bacterial Core Surveillance (ABCs) is a core component of the CDC's Emerging Infections Programs Network (EIP).
Method:	Isolate is subcultured and identified prior to submission to CDC.
Interfering Substances/Limitations:	N/A
Testing Site:	MD Department of Health Laboratories Administration, Central Laboratory 1770 Ashland Avenue, Baltimore, Maryland 21205

Continued Next Page>

Comment:	Active Bacterial Core Surveillance (ABCs) is a core component of the CDC's Emerging Infections Programs Network (EIP), collaboration between CDC, state health departments, and universities. ABCs is an active laboratory and population-based surveillance system for invasive bacterial pathogens of public health importance. For each case of invasive disease in the surveillance population, a case report with basic demographic information is completed and bacterial isolates are sent to CDC and other reference laboratories for additional laboratory evaluation. ABCs was initially established in four (4) states in 1995. It currently operates among ten (10) EIP sites across the United States, representing a population of over 38 million persons. At this time, ABCs conducts surveillance for six (6) pathogens: Group A and Group B streptococcus (GAS, GBS), *Haemophilus influenzae*, *Neisseria meningitidis*, *Streptococcus pneumoniae*, and Listeria monocytogenes. The MD Department of Health is an EIP site with partner Johns Hopkins Bloomberg School of Public Health.

TEST:	**Adenovirus, Viral Culture**
Synonym:	Adenovirus: Virus Culture, Virus isolation: Refer to instructions for **Virus Culture.**
Laboratory/Phone:	Virology: 443-681-3934
Turnaround Time:	3-28 days

TEST:	**AFB/Acid-fast Bacilli culture (*Mycobacterium tuberculosis* identification)**
Synonym:	AFB/Acid Fast Bacteria Identification (Acid Fast Bacilli); *M. Tuberculosis* culture: Refer to instructions for ***Mycobacterium tuberculosis* culture.**
Laboratory/Phone:	Mycobacteriology / 443-681-3942

TEST:	**Amoebiasis (Ova and Parasites Microscopic Examination)**
Synonym:	Amoebiasis; Amebiasis: Refer to instructions for **Ova and Parasites Microscopic Examination.**
Laboratory/Phone:	Microbiology / 443-681-3952

TEST:	**Anthrax, Cutaneous**
Synonym:	*Bacillus anthracis*, Woolsorters' disease
Laboratory/Phone:	Office of Laboratory Emergency Preparedness and Response: **410-925-3121 (24/7 emergency contact number)** Select Agents Microbiology Laboratory: 443-681-3954 Division of Microbiology Laboratory: 443-681-3952
Turnaround Time:	2-7 days [from specimen receipt in the Laboratory]
Specimen Required:	1. Vesicular Stage: Vesicular fluid 2. Eschar Stage: Eschar material 3. Isolate
Specimen Identification:	Specimen should be labeled with patient's last and first name, patient's address, DOB, specimen type/source, and the date and time of collection. The specimen/sample must be properly labeled and match the test requisition or electronic test order.
Specimen Volume (Optimum):	N/A
Specimen Volume (Minimum):	N/A
Collect:	1. Vesicular Stage: Collect vesicular fluid on sterile swab from previously unopened vesicles. 2. Eschar Stage: Collect eschar material by carefully lifting the eschar's outer edge, insert sterile swab, then slowly rotate for 2-3 seconds beneath the edge of the eschar without removing it. 3. Isolate: Pure culture, 24 hours old, growing on sheep blood agar plate.
Form:	MDH Form #4676 Infectious Agents: Culture/Detection (Order Forms: 443-681-3777 or form may be downloaded from MDH Laboratory website). **Indicate specimen type using the "Specimen Code" on the form.**
Continued Next Page>	

Packaging and Shipping*:	Specimens must be packaged in a triple packaging system to ensure that under normal conditions of transport they cannot break, be punctured or leak their contents (Refer to pages 9 & 10 for triple packing guidance). ***Refer to current Federal regulations for specific shipping requirements.**
Transport Conditions:	1. Swabs: Transport directly to laboratory at room temperature. For transport time > 1 hour, transport at 2-8ºC. 2. Isolate: Transport the specimen at room temperature on a sealed sheep blood agar plate.
Specimen Rejection Criteria:	The following rejection criteria are designed to prevent the reporting of inaccurate results and to avoid misleading information that might lead to misdiagnosis and inappropriate therapy. A request for a new specimen will provide appropriate materials and clinically relevant information to support good patient care. ▪ Unlabeled or improperly labeled specimen ▪ Non-sterile or leaking container ▪ Inappropriate specimen transport conditions ▪ Illegible, or no submitter information on the request form ▪ Mismatched form and specimen ▪ Broken specimen/sample container ▪ The wrong specimen for test request ▪ Inappropriate outfit for requested test ▪ Illegible or no patient information on the specimen ▪ Expired transport media
Availability:	24 hours/day, 7 days/week
Results and Interpretation:	*Bacillus anthracis* isolated/detected. *Bacillus anthracis* not found.
Additional Information:	***Call 410-925-3121 before sending specimen to the Laboratory.***
Purpose of Test:	To confirm diagnosis of cutaneous anthrax.
Method:	LRN Methods
Interfering Substances:	N/A
Testing Site:	MD Department of Health Laboratories Administration, Central Laboratory 1770 Ashland Avenue, Baltimore, Maryland
Comment:	***Call 410-925-3121 before sending to the Laboratory.***

TEST:	**Anthrax, Gastrointestinal**
Synonym:	*Bacillus anthracis*, Woolsorters' disease
Laboratory/Phone:	Office of Laboratory Emergency Preparedness and Response: **410-925-3121 (24/7 emergency contact number)** Select Agents Microbiology Laboratory: 443-681-3954 Division of Microbiology Laboratory: 443-681-3952
Turnaround Time:	2-7 days [from specimen receipt in the Laboratory]
Specimen Required:	1. Blood Cultures 2. Stool 3. Rectal swab (for patients unable to pass a specimen) 4. Isolate
Specimen Identification:	Specimen should be labeled with patient's last and first name, patient's address, DOB, specimen type/source, and the date and time of collection. The specimen/sample must be properly labeled and match the test requisition or electronic test order.
Specimen Volume (Optimum):	N/A
Specimen Volume (Minimum):	N/A
Collect:	1. Blood Cultures: Collect appropriate blood volume and number of sets per routine laboratory protocol. 2. Stool: Transfer ≥ 5g of stool directly into a clean, dry, sterile, wide-mouth, leak-proof container. 3. Rectal swab: Insert a sterile swab one (1) inch beyond the anal sphincter. 4. Isolate: Pure culture, 24 hours old, growing on a sheep blood agar plate.

Continued Next Page>

Form:	MDH Form #4676 Infectious Agents: Culture/Detection (Order Forms: 443-681-3777 or form may be downloaded from MDH Laboratory website). **Indicate specimen type using the "Specimen Code" on the form.**
Packaging and Shipping*:	Specimens must be packaged in a triple packaging system to ensure that under normal conditions of transport they cannot break, be punctured or leak their contents (Refer to pages 9 & 10 for triple packing guidance). ***Refer to current Federal regulations for specific shipping requirements.**
Transport Conditions:	1. Blood Cultures: Transport directly to the laboratory at room temperature. 2. Stool: Transport unpreserved stool to laboratory within one (1) hour. For transport time > 1 hour, transport at 2-8ºC. Cary-Blair or equivalent transport media is acceptable. 3. Rectal Swab: Transport swab(s) directly to laboratory at room temperature. For transport time > 1 hour, transport at 2-8ºC. 4. Isolate: Transport the specimen at room temperature on a sealed sheep blood plate.
Specimen Rejection Criteria:	The following rejection criteria are designed to prevent the reporting of inaccurate results and to avoid misleading information that might lead to misdiagnosis and inappropriate therapy. A request for a new specimen will provide appropriate materials and clinically relevant information to support good patient care. ▪ Unlabeled or improperly labeled specimen ▪ Non-sterile or leaking container ▪ Inappropriate specimen transport conditions ▪ Illegible, or no submitter information on the request form ▪ Mismatched form and specimen ▪ Broken specimen/sample container ▪ The wrong specimen for test request ▪ Inappropriate outfit for requested test ▪ Illegible or no patient information on the specimen ▪ Expired transport media
Availability:	24 hours/day, 7 days/week
Results and Interpretation:	*Bacillus anthracis* is isolated/detected. *Bacillus anthracis* not found.
Additional Information:	***Call 410-925-3121 before sending specimen to the Laboratory.***
Purpose of Test:	To confirm diagnosis of gastrointestinal anthrax.
Method:	LRN Methods
Interfering Substances:	N/A
Testing Site:	MD Department of Health Laboratories Administration, Central Laboratory 1770 Ashland Avenue, Baltimore, Maryland 21205
Comment:	***Call 410-925-3121 before sending specimen to the Laboratory.***

TEST:	**Anthrax, Inhalational**
Synonym:	*Bacillus anthracis*, Woolsorters' disease
Laboratory/Phone:	Office of Laboratory Emergency Preparedness and Response: **410-925-3121 (24/7 emergency contact number)** Select Agents Microbiology Laboratory: 443-681-3954 Division of Microbiology Laboratory: 443-681-3952
Turnaround Time:	2-7 days [from specimen receipt in the Laboratory]
Specimen Required:	1. Blood Cultures 2. Sputum 3. Isolate
Specimen Identification:	Specimen should be labeled with patient's last and first name, patient's address, DOB, specimen type/source, and the date and time of collection. The specimen/sample must be properly labeled and match the test requisition or electronic test order.
Specimen Volume (Optimum):	N/A
Specimen Volume (Minimum):	N/A
Collect:	1. Blood Cultures: Collect appropriate blood volume and number of sets per routine laboratory protocol. 2. Sputum: Collect >1 ml of a lower respiratory specimen into a sterile container. 3. Isolate: Pure culture, 24 hours old, growing on a sheep blood agar plate.
Form:	MDH Form #4676 Infectious Agents: Culture/Detection (Order Forms: 443-681-3777 or form may be downloaded from MDH Laboratory website). **Indicate specimen type using the "Specimen Code" on the form.**
Continued Next Page>	

Packaging and Shipping*:	Specimens must be packaged in a triple packaging system to ensure that under normal conditions of transport they cannot break, be punctured or leak their contents (Refer to pages 9 & 10 for triple packing guidance). ***Refer to current Federal regulations for specific shipping requirements.**
Transport Conditions:	1. Blood Cultures: Transport directly to the laboratory at room temperature. 2. Sputum: Transport in sterile, screw-capped container at room temperature when transport time is <1 hour. For transport time > 1 hour, transport at 2-8ºC. 3. Isolates: Transport at room temperature on a sealed sheep blood agar plate.
Specimen Rejection Criteria:	The following rejection criteria are designed to prevent the reporting of inaccurate results and to avoid misleading information that might lead to misdiagnosis and inappropriate therapy. A request for a new specimen will provide appropriate materials and clinically relevant information to support good patient care. ▪ Unlabeled or improperly labeled specimen ▪ Non-sterile or leaking container ▪ Inappropriate specimen transport conditions ▪ Illegible, or no submitter information on the request form ▪ Mismatched form and specimen ▪ Broken specimen/sample container ▪ The wrong specimen for test request ▪ Inappropriate outfit for requested test ▪ Illegible or no patient information on the specimen ▪ Expired transport media
Availability:	24 hours/day, 7 days/week
Results and Interpretation:	*Bacillus anthracis* isolated/detected; *Bacillus anthracis* not found.
Additional Information:	***Call 410-925-3121 before sending specimen to the Laboratory.***
Purpose of Test:	To confirm diagnosis of Inhalational Anthrax.
Method:	LRN Methods
Interfering Substances:	N/A
Testing Site:	MD Department of Health Laboratories Administration, Central Laboratory 1770 Ashland Avenue, Baltimore, Maryland 21205
Comment:	***Call 410-925-3121 before sending to the Laboratory.***

TEST:	**Antimicrobial Susceptibility Test**
Synonym:	Disk Diffusion Susceptibility Testing, E-test, Susceptibility Testing or Microbroth Dilution Susceptibility Testing
Laboratory/Phone:	Microbiology / 443-681-3952
Turnaround Time:	48-72 hrs. [from specimen receipt in the Laboratory]
Specimen Required:	Original specimen or pure isolate of rapidly growing non-fastidious aerobic bacteria.
Specimen Identification:	Specimen should be labeled with patient's last and first name, patient's address, DOB, specimen type/source, and the date and time of collection. The specimen/sample must be properly labeled and match the test requisition or electronic test order.
Specimen Volume (Optimum):	Viable pure isolate on an appropriate slant.
Specimen Volume (Minimum):	N/A
Collect:	N/A
Form:	MDH Form #4676 Infectious Agents: Culture/Detection (Order Forms: 443-681-3777 or form may be downloaded from MDH Laboratory website). **Indicate specimen type using the "Specimen Code" on form.**
Packaging and Shipping*:	Specimens must be packaged in a triple packaging system to ensure that under normal conditions of transport they cannot break, be punctured or leak their contents (Refer to pages 9 & 10 for triple packing guidance). ***Refer to current Federal regulations for specific shipping requirements.**
Transport Conditions:	Room temperature
Continued Next Page>	

Specimen Rejection Criteria:	The following rejection criteria are designed to prevent the reporting of inaccurate results and to avoid misleading information that might lead to misdiagnosis and inappropriate therapy. A request for a new specimen will provide appropriate materials and clinically relevant information to support good patient care. ▪ Unlabeled or improperly labeled specimen ▪ Non-sterile or leaking container ▪ Inappropriate specimen transport conditions ▪ Illegible, or no submitter information on the request form ▪ Mismatched form and specimen ▪ Broken specimen/sample container ▪ The wrong specimen for test request ▪ Inappropriate outfit for requested test ▪ Illegible or no patient information on the specimen ▪ Expired transport media ▪ Non-viable organism
Availability:	Monday through Friday
Results and Interpretation:	Results are reported as S-I-R, following Clinical Laboratory Standards Institute (CLSI) criteria for organism/source combination.
Reference Range:	CSLI guidelines
Additional Information:	If original specimen is submitted, pathogenic bacteria should be isolated from it.
Purpose of Test:	To assist the physician in choosing an appropriate antimicrobial agent(s) for therapy.
Method:	Disk Diffusion
Interfering Substances:	Administration of antimicrobial agents before specimen collection.
Testing Site:	MD Department of Health Laboratories Administration, Central Laboratory 1770 Ashland Avenue, Baltimore, Maryland 21205
Comment:	The antibiotics tested and reported will follow the latest CLSI recommendations appropriate for the bacterial species submitted for testing; the methodology used will also follow CLSI recommendations.

TEST:	**Antimicrobial Susceptibility Test, Minimum Inhibitory Concentration (MIC), Aerobic Bacteria**
Synonym:	N/A
Laboratory/Phone:	Microbiology 443-681-3952
Turnaround Time:	48-72 hrs. [from specimen receipt in the Laboratory]
Specimen Required:	Original specimen or a pure isolate of aerobic bacteria.
Specimen Identification:	Specimen should be labeled with patient's last and first name, patient's address, DOB, specimen type/source, and the date and time of collection. The specimen/sample must be properly labeled and match the test requisition or electronic test order.
Specimen Volume (Optimum):	Viable pure isolate on an appropriate slant.
Specimen Volume (Minimum):	N/A
Collect:	N/A
Form:	MDH Form #4676 Infectious Agents: Culture/Detection (Order Forms: 443-681-3777 or form may be downloaded from MDH Laboratory website). **Indicate specimen type using the "Specimen Code" on form.**
Packaging and Shipping*:	Specimens must be packaged in a triple packaging system to ensure that under normal conditions of transport they cannot break, be punctured or leak their contents (Refer to pages 9 & 10 for triple packing guidance). ***Refer to current Federal regulations for specific shipping requirements.**
Transport Conditions:	Room temperature
Continued Next Page>	

Specimen Rejection Criteria:	The following rejection criteria are designed to prevent the reporting of inaccurate results and to avoid misleading information that might lead to misdiagnosis and inappropriate therapy. A request for a new specimen will provide appropriate materials and clinically relevant information to support good patient care. ▪ Unlabeled or improperly labeled specimen ▪ Non-sterile or leaking container ▪ Inappropriate specimen transport conditions ▪ Illegible, or no submitter information on the request form ▪ Mismatched form and specimen ▪ Broken specimen/sample container ▪ The wrong specimen for test request ▪ Inappropriate outfit for requested test ▪ Illegible or no patient information on the specimen ▪ Expired transport media
Availability:	Monday through Friday
Results and Interpretation:	Results are reported as S-I-R following Clinical Laboratory Standard Institute (CLSI) criteria for organism/source combination.
Reference Range:	CSLI guidelines
Additional Information:	Test is performed on aerobic possible pathogens.
Purpose of Test:	To assist the physician in choosing an appropriate drug therapy, monitoring emerging resistance, monitoring percentage susceptibility trend.
Method:	E-Test, Microbroth Dilution, or Vitek
Interfering Substances:	Administration of antimicrobial before specimen collection.
Testing Site:	MD Department of Health Laboratories Administration, Central Laboratory 1770 Ashland Avenue, Baltimore, Maryland 21205
Comment:	N/A

TEST:	**Arbovirus Culture**
Synonym:	
Laboratory/Phone:	Virology: 443-681-3937
Turnaround Time:	3-6 weeks for both negatives and positives
Specimen Required:	CSF, throat washing, brain and spinal cord tissue
Specimen identification:	Label container with patient's last name, first name, DOB, specimen type, date and time of collection. The specimen/sample must be properly labeled and match the test requisition or electronic test order.
Specimen Volume (Optimum):	≥ 2ml or 4 grams of tissue
Specimen Volume (Minimum):	2ml or 4 grams of tissue
Collect:	Sterile container with leak-proof lid.
Form:	MDH Form #4676 Infectious Agents: Culture/Detection (Order Forms: 443-681-3777 or form may be downloaded from MDH Laboratory website). **Indicate specimen type using the "Specimen Code" on form.**
Packaging and Shipping*:	Specimens must be packaged in a triple packaging system to ensure that under normal conditions of transport they cannot break, be punctured or leak their contents (Refer to pages 9 & 10 for triple packing guidance). ***Refer to current Federal regulations for specific shipping requirements.**
Transport Conditions:	Deliver on dry ice.
Specimen Rejection Criteria:	Unlabeled specimen, mismatch between labeling of specimen and test request form.
Availability:	Monday-Friday
Results and Interpretation:	Isolated or No viruses isolated
Additional Information:	The term "Arbovirus" has no taxonomic significance, but is a shortened name given to viruses that are transmitted by blood feeding arthropods (mosquitoes, ticks, etc.). Arboviruses that cause human encephalitis are members of three virus families: The *Togaviridae* (genus *Alphavirus*), *Flaviviridae*, and *Bunyaviridae*. For more information, see the CDC link at: https://www.cdc.gov/ncezid/dvbd/
Purpose of Test:	Virus isolation to determine probable cause of infection and aid in the diagnosis of viral disease or to further characterization for epidemiological purposes.
Method:	Viral culture
Interfering Substances:	
Continued Next Page>	

Testing Site:	MD Department of Health Laboratories Administration, Central Laboratory 1770 Ashland Avenue, Baltimore, Maryland 21205
Comment:	

TEST:	**Arbovirus Endemic Panel** **Panel includes WNV, SLE, EEEV, JCV**
Synonym:	**Ar**thropod-**bo**rne **virus:** WNV (West Nile Virus), EEEV (Eastern Equine Encephalitis Virus), SLEV (St. Louis Encephalitis Virus), Jamestown Canyon Virus (JCV)
Laboratory/Phone:	Virology: 443-681-3936/3931 Molecular (PCR): 443-681-3924/3923
Turnaround Time:	5-10 business days during Arbovirus Season (excluding PRNT Testing)
Specimen Required:	Serum (blood); CSF
Specimen identification:	The specimen/sample must be properly labeled and include the patient's name or unique patient/sample identifier matching the test requisition or electronic test order.
Specimen Volume (Optimum):	2 ml serum; 2ml CSF
Specimen Volume (Minimum):	1 ml serum; 0.5 ml CSF
Collect:	Red top vacuum tube, transfer serum to sterile tube: CSF in sterile container with leak-proof cap.
Form:	MDH Form #4677 Serological Testing (Order Forms: 443-681-3777 or form may be downloaded from MDH Laboratory website). **For testing to be initiated, the following information MUST be provided: date of onset, and date specimen collected.** Also, please provide: patient's date of birth, diagnosis, symptoms, fatality, travel history, immunizations, and whether patient is immunocompromised.
Packaging and Shipping*:	Specimens must be packaged in a triple packaging system to ensure that under normal conditions of transport they cannot break, be punctured or leak their contents (Refer to pages 9 & 10 for triple packing guidance). ***Refer to current Federal regulations for specific shipping requirements.**
Transport Conditions:	Store refrigerated and ship on cold packs in a cooler. If shipping is delayed beyond 48 hours, CSF must be frozen at -20°C and shipped on dry ice.
Specimen Rejection Criteria:	Grossly hemolyzed specimens, unlabeled specimen, leaking container, mismatch between labeling of specimen and test request form, and CSF specimen collected > 48 hours prior to arrival without being frozen.
Availability:	Monday through Friday.
Results and Interpretation:	(EIA) IgM: Negative, High Background, Equivocal, Positive (MIA) IgM: Positive, Negative, Nonspecific Serum and CSF that tests positive for IgM is consistent with acute infection.
Additional Information:	For more information, see the CDC link at: https://www.cdc.gov/ncezid/dvbd/ The MDH Laboratories Administration routinely tests for IgM antibody to WNV, SLEV, JCV, and EEEV, which are endemic to this area. Confirmatory testing by PRNT (plaque reduction neutralization test) may be necessary on positive samples. A convalescent serum sample (collected > 10 days after onset date) is needed for PRNT testing. Please contact the Arbovirus Serology laboratory with any questions regarding PRNT. Lacrosse IgM serology testing is available based on patient's travel history.
Purpose of Test:	For the presumptive detection of WNV, SLEV, EEEV, JCV, and LAC. Confirmatory testing by PRNT may be required.
Method:	EIA, MIA (Microimmunoassay), PCR, PRNT
Interfering Substances:	
Testing Site:	MD Department of Health Laboratories Administration, Central Laboratory 1770 Ashland Avenue, Baltimore, Maryland 21205
Comment:	Serology testing for WN/SLE will be performed on all serum specimens. If sample volume permits, EEE IgM and JCV serology testing will also be performed. All CSF specimens will be tested by PCR & serology. PCR testing will only be performed on serum specimens collected in the acute phase (<10 days between onset date and collection date). PCR testing will be performed on all immunocompromised patient samples. Paired specimens are NOT required. NOTE: Jamestown Canyon virus testing is for EPIDEMIOLOGICAL purposes and a report will not be issued.

TEST:	**Arbovirus Travel-Associated Panel** Panel includes Chikungunya, Dengue, Zika
Synonym:	**Ar**thropod-**bo**rne **virus:** Chikungunya, Dengue fever, Zika
Laboratory/Phone:	Virology: 443-681-3936/3931 Molecular (PCR): 443-681-3924/3923
Turnaround Time:	5-10 business days during Arbovirus Season (excluding PRNT Testing)
Specimen Required:	Serum; CSF; Urine; Whole blood
Specimen identification:	The specimen/sample must be properly labeled and include the patient's name or unique patient/sample identifier matching the test requisition or electronic test order.
Specimen Volume (Optimum):	5 ml serum; 10 ml urine (PCR); 5 ml whole blood (PCR)
Specimen Volume (Minimum):	3 ml serum; 5 ml urine (PCR); 4 ml whole blood (PCR)
Collect:	Red top vacutainer tube, transfer serum to sterile tube: Whole blood in Lavender Top vacutainer with EDTA. Urine in sterile container with leak-proof cap.
Form:	MDH Form# 4677 Serological Testing (Order Forms: 443-681-3777) **For testing to be initiated, the following information MUST be provided: date of onset, and date specimen collected.** Also please provide: patient's date of birth, diagnosis, symptoms, fatality, travel history, immunizations, and whether patient is immunocompromised.
Packaging and Shipping*:	Specimens must be packaged in a triple packaging system to ensure that under normal conditions of transport they cannot break, be punctured or leak their contents (Refer to pages 9 & 10 for triple packing guidance). ***Refer to current Federal regulations for specific shipping requirements.**
Transport Conditions:	Ambient temperature for specimens on the blood clot (whole blood specimens and urine transported on ice packs are acceptable), separated serum at 2-8°C (refrigerated) or -20°C (frozen). If shipping is delayed beyond 7 days, serum must be frozen at -20°C and shipped on dry ice.
Specimen Rejection Criteria:	Grossly hemolyzed specimens, unlabeled specimen, leaking container, and mismatch between labeling of specimen and test request form, specimen collected > 7 days prior to arrival without being frozen, and does not meet epidemiological criteria required for testing (e.g. travel history, symptoms, etc.)
Availability:	Monday through Friday.
Results and Interpretation:	Zika IgM: Negative, Presumptive Positive, "Other Flavivirus Presumptive Positive" Dengue & Chikungunya IgM: Positive, Negative, Equivocal Non-Negative results may be confirmed by PRNT.
Additional Information:	
Purpose of Test:	For the presumptive detection of Chikungunya, Dengue & Zika virus. Confirmatory testing by PRNT may be required.
Method:	ELISA, PCR, PRNT
Interfering Substances:	
Testing Site:	MD Department of Health Laboratories Administration, Central Laboratory 1770 Ashland Avenue, Baltimore, Maryland 21205
Comment:	Serology testing for Dengue/Zika/Chikungunya will be performed on all serum specimens that meet epidemiological criteria. Convalescent specimen for additional PRNT testing may be required. PCR testing will only be performed on specimens that meet current epidemiological criteria. A serum specimen must accompany urine or whole blood specimens or testing will not be performed. For additional information: https://phpa.health.maryland.gov/pages/zika.aspx

TEST:	Arthropod Identification
Synonym:	Tick identification/Ectoparasite
Laboratory/Phone:	Microbiology/ 443-681-3952
Turnaround Time:	48-72 hrs. [from specimen receipt in the Laboratory]
Specimen Required:	Whole parasite
Specimen Identification:	Specimen should be labeled with patient's last and first name, patient's address, DOB, specimen type/source, and the date and time of collection. The specimen/sample must be properly labeled and match the test requisition or electronic test order.
Specimen Volume (Optimum):	Whole parasite
Specimen Volume (Minimum):	N/A
Collect:	Collect the whole parasite; put it in a clean container with a tight fitting lid with alcohol.
Form:	MDH Form #4676 Infectious Agents: Culture/Detection (Order Forms: 443-681-3777 or form may be downloaded from MDH Laboratory website). **Indicate specimen type using the "Specimen Code" on form.**
Packaging and Shipping*:	Specimens must be packaged in a triple packaging system to ensure that under normal conditions of transport they cannot break, be punctured or leak their contents (Refer to pages 9 & 10 for triple packing guidance). ***Refer to current Federal regulations for specific shipping requirements.**
Transport Conditions:	Room temperature
Specimen Rejection Criteria:	The following rejection criteria are designed to prevent the reporting of inaccurate results and to avoid misleading information that might lead to misdiagnosis and inappropriate therapy. A request for a new specimen will provide appropriate materials and clinically relevant information to support good patient care. ▪ Unlabeled or improperly labeled specimen ▪ Non-sterile or leaking container ▪ Inappropriate specimen transport conditions ▪ Illegible, or no submitter information on the request form ▪ Mismatched form and specimen ▪ Broken specimen/sample container ▪ The wrong specimen for test request ▪ Inappropriate outfit for requested test ▪ Illegible or no patient information on the specimen ▪ Expired transport media ▪ Received only partial parasite
Availability:	Monday through Friday
Results and Interpretation:	Genus/species
Reference Range:	N/A
Additional Information:	N/A
Purpose of Test:	Identify disease carrying arthropods
Method:	Macroscopic examination
Interfering Substances:	N/A
Testing Site:	MD Department of Health Laboratories Administration, Central Laboratory 1770 Ashland Avenue, Baltimore, Maryland 21205
Comment:	N/A

TEST:	*Aspergillus* serology
Synonym:	Aspergillosis antibody test
Laboratory/Phone:	Virology: 443-681-3938/3931
Turnaround Time:	5 business days
Specimen Required:	Serum
Specimen identification:	The specimen/sample must be properly labeled and include the patient's name or unique patient/sample identifier matching the test requisition or electronic test order.
Specimen Volume (Optimum):	2 ml. (Whole Blood)
Specimen Volume (Minimum):	1 ml. (Whole Blood)
Collect:	Red-top vacutainer tube

Continued Next Page>

Form:	MDH Form #4677 Serological Testing (Order Forms: 443-681-3777 or form may be downloaded from MDH Laboratory website). **Indicate specimen type using the "Specimen Code" on form.** Date specimen collected **MUST** be provided.
Packaging and Shipping*:	Specimens must be packaged in a triple packaging system to ensure that under normal conditions of transport they cannot break, be punctured or leak their contents (Refer to Page 9 & 10). ***Refer to current Federal regulations for specific shipping requirements.**
Transport Conditions:	Ambient temperature for specimens on the blood clot (whole blood specimens transported on ice packs are acceptable), separated serum at 2-8°C (refrigerated) or -20°C (frozen). If shipping is delayed beyond 3 days, serum must be frozen at -20°C and shipped on dry ice.
Specimen Rejection Criteria:	Grossly hemolyzed specimens, unlabeled specimen, leaking container, insufficient volume, mismatch between labeling of specimen and test request form, specimen collected > 3 days prior to arrival without being frozen.
Availability:	Monday through Friday
Results and Interpretation:	POSITIVE- Antibodies against (*A. fumigatus, A. flavus, A. niger) detected.* *NEGATIVE*- Antibodies against (*A. fumigatus, A. flavus, A. niger) not detected.*
Additional Information:	
Purpose of Test:	For the detection of antibody to *A. fumigatus, A. flavus, A. niger*
Method:	Immunodiffusion
Interfering Substances:	Hemolysis
Testing Site:	MD Department of Health Laboratories Administration, Central Laboratory 1770 Ashland Avenue, Baltimore, Maryland 21205
Comment:	Serologic results should not be used as a sole means for diagnosis, treatment, or for the assessment of a patient's health. Clinical correlation is required. False negatives can occur with specimens from patients receiving long term antifungal or corticosteroid therapy.

TEST:	**Babesia Serology (Tick-borne Disease Panel)**
Synonym:	*Babesia microti, babesiosis,* **Refer to instructions in Tick-Borne Disease Panel**
Laboratory/Phone:	443-681-3938/3931
Specimen Required:	Serum (acute and convalescent preferred)
Results and Interpretation:	≥1:64: Reflect infection at an undetermined time by *Babesia microti* *<1:64:* Babesia antibody not detected. Another specimen should be drawn if the original was taken soon after onset
Additional Information:	http://www.cdc.gov/parasites/babesiosis/
Purpose of Test:	For the detection IgG antibodies which may be due to a *Babesia microti*
Methods:	Immunofluorescence Assay (IFA)
Comment:	Cross reaction with *Plasmodium spp.* has been documented. Cross reactivity with *Babesia divergens also occurs* which causes a more severe infection in European patients is possible. A four-fold increase in titer between acute and convalescent serum specimens supports the diagnosis of recent infection. Acute phase sera should be collected within the first week after onset of illness, and convalescent phase sera, 2-4 weeks after onset.

TEST:	***Bacillus anthracis* Culture**
Synonym:	*For Bacillus anthracis* culturing: Refer to **Anthrax, Cutaneous, Anthrax, Gastrointestinal, or Anthrax, Inhalational**, for specific instructions as required.
Laboratory/Phone:	Office of Laboratory Emergency Preparedness and Response: **410-925-3121 (24/7 emergency contact number)** Select Agents Microbiology Laboratory: 443-681-3954 Division of Microbiology Laboratory: 443-681-3952

TEST:	***Bacillus cereus* Culture**
Synonym:	*Bacillus cereus* Culture: For specific instructions refer to **Foodborne Pathogens (Bacillus cereus, Clostridium perfringens, Staph aureus)**.
Laboratory/Phone:	Microbiology / 443-681-3952

TEST:	**Bacterial Culture, Routine**
Synonym:	Aerobic culture, routine culture, eye culture, ear culture, genital culture, nose culture, respiratory culture, throat culture, urine culture, wound culture, sterile fluid culture.
Laboratory/Phone:	Microbiology / 443-681-3952
Turnaround Time:	Varies depending on culture site and organisms isolated, usually 2-4 days (or longer if fastidious organism isolate) [from specimen receipt in the Laboratory].
Specimen Required:	Swab from site in transport media (Amies, Stuarts, culturette) Aseptically aspirated pus or tissue Clean-catch urine Fluid in sterile container with leak-proof lid **Do not send a syringe with needle attached. (Specimen will be rejected)**
Specimen identification:	Specimen should be labeled with patient's last and first name, patient's address, DOB, specimen type/source, and the date and time of collection. The specimen/sample must be properly labeled and match the test requisition or electronic test order.
Specimen Volume (Optimum):	Swab or 0.5 ml fluid
Specimen Volume (Minimum):	N/A
Collect:	Most sites: Use swab to collect and place in transport media (Amies or Stuarts). Urine: fresh, clean-catch urine in screw cap jar, refrigerate, must reach lab within 24 hours, ship promptly on cold packs. Wound: Disinfect contiguous areas of skin or mucous membrane containing resident normal flora prior to culture collection. Collect exudates from the interior of productive lesions. Keep tissue samples moist. A thin, air-dried smear for Gram stain obtained from the same site as the culture is recommended.
Form:	MDH Form #4676 Infectious Agents: Culture/Detection (Order Forms: 443-681-3777 or form may be downloaded from MDH Laboratory website). **Indicate specimen type using the "Specimen Code" on form.**
Packaging and Shipping*:	Specimens must be packaged in a triple packaging system to ensure that under normal conditions of transport they cannot break, be punctured or leak their contents (Refer to pages 9 & 10 for triple packing guidance). ***Refer to current Federal regulations for specific shipping requirements.**
Transport Conditions:	*Room temperature:* abscesses, burn swabs, dental cultures, ear (inner ear), eye specimens, sterile body fluids, genital, Intra Uterine Device (IUD), spore testing, tissues, wound swabs, nasopharynx, upper respiratory cultures. *At refrigerator (4°C) if kept > 2 hours*: catheters, ear (external ear), feces for *C. difficile* Toxin A&B (**frozen if test not done within three (3) days**), sputum, urine – all types, autopsy tissue. *At 37°C (or room temperature, if unavailable):* blood culture bottles, bone marrow, cerebrospinal fluid (CSF)
Continued Next Page>	

Specimen Rejection Criteria:	The following rejection criteria are designed to prevent the reporting of inaccurate results and to avoid misleading information that might lead to misdiagnosis and inappropriate therapy. A request for a new specimen will provide appropriate materials and clinically relevant information to support good patient care. ▪ Unlabeled or improperly labeled specimen ▪ Non-sterile or leaking container ▪ Inappropriate specimen transport conditions ▪ Illegible, or no submitter information on the request form ▪ Mismatched form and specimen ▪ Broken specimen/sample container ▪ The wrong specimen for test request ▪ Inappropriate outfit for requested test ▪ Illegible or no patient information on the specimen ▪ Expired transport media ▪ Specimen received after prolonged delay (usually more than 72 hours)
Availability:	Monday through Friday
Results and Interpretation:	Identification of potentially pathogenic organisms and antimicrobial susceptibilities, if clinically appropriate.
Reference Range:	No growth, routine/normal skin flora, routine/normal "body site" flora.
Additional Information:	N/A
Purpose of Test:	Isolation, identification and if clinically appropriate, antimicrobial susceptibilities of potentially pathogenic organisms.
Method:	Culture, staining, biochemical testing, antimicrobial susceptibility testing.
Interfering Substances/Limitations:	Only rapid-growing, no fastidious aerobic organisms can be recovered and identified by routine culture methods. "Bacterial culture, routine" will not detect anaerobic bacteria, chlamydia, viruses, fungi, or mycobacteria.
Testing Site:	MD Department of Health Laboratories Administration, Central Laboratory 1770 Ashland Avenue, Baltimore, Maryland 21205
Comment:	N/A

TEST:	**Bacterial Referred Culture for ID**
Synonym:	Isolate for Identification; referred culture
Laboratory/Phone:	Microbiology / 443-681-3952
Turnaround Time:	Varies depending on organisms submitted.
Specimen Required:	Isolate subcultured on agar slant with a leak-proof screw top lid.
Specimen Identification:	Specimen should be labeled with patient's last and first name, patient's address, DOB, specimen type/source, and the date and time of collection. The specimen/sample must be properly labeled and match the test requisition or electronic test order.
Specimen Volume (Optimum):	N/A
Specimen Volume (Minimum):	N/A
Collect:	N/A
Form:	MDH Form #4676 Infectious Agents: Culture/Detection (Order Forms: 443-681-3777 or form may be downloaded from MDH Laboratory website). **Indicate specimen type using the "Specimen Code" on form.**
Packaging and Shipping*:	Specimens must be packaged in a triple packaging system to ensure that under normal conditions of transport they cannot break, be punctured or leak their contents (Refer to pages 9 & 10 for triple packing guidance). ***Refer to current Federal regulations for specific shipping requirements.**
Transport Conditions:	Store and ship at the proper temperature
Continued Next Page>	

Specimen Rejection Criteria:	The following rejection criteria are designed to prevent the reporting of inaccurate results and to avoid misleading information that might lead to misdiagnosis and inappropriate therapy. A request for a new specimen will provide appropriate materials and clinically relevant information to support good patient care. ▪ Unlabeled or improperly labeled specimen ▪ Non-sterile or leaking container ▪ Inappropriate specimen transport conditions ▪ Illegible, or no submitter information on the request form ▪ Mismatched form and specimen ▪ Broken specimen/sample container ▪ The wrong specimen for test request ▪ Inappropriate outfit for requested test ▪ Illegible or no patient information on the specimen ▪ Expired transport media ▪ Specimen received after prolonged delay (usually more than 72 hours)
Availability:	Monday through Friday
Results and Interpretation:	Identification of submitted isolate.
Reference Range:	N/A
Additional Information:	N/A
Purpose of Test:	Identification and if clinically appropriate, antimicrobial susceptibilities of potentially pathogenic organisms.
Method:	Culture, staining, biochemical testing, and MALDI-TOF.
Interfering Substances/Limitations:	N/A
Testing Site:	MD Department of Health Laboratories Administration, Central Laboratory 1770 Ashland Avenue, Baltimore, Maryland 21205
Comment:	N/A

TEST:	**Bang's Disease (Brucella serology and Brucella species culture)**
Synonym:	Bang's Disease, Undulant fever, Malta Fever, and Rock of Gibraltar Fever: Refer to instructions for ***Brucella* serology** or ***Brucella* species, culture.**
Laboratory/Phone:	Office of Laboratory Emergency Preparedness and Response: **410-925-3121 (24/7 emergency contact number)** Select Agents Microbiology Laboratory: 443-681-3954 Division of Microbiology Laboratory: 443-681-3952

TEST:	**Blood Culture (limited to Medical Examiner and special requests only)**
Synonym:	N/A
Laboratory/Phone:	Microbiology 443-681-3952
Turnaround Time:	Seven (7) days [from specimen receipt in the Laboratory]
Specimen Required:	Blood collected in B-D blood culture bottle
Specimen Identification:	Specimen should be labeled with patient's last and first name, patient's address, DOB, specimen type/source, and the date and time of collection. The specimen/sample must be properly labeled and match the test requisition or electronic test order.
Specimen Volume (Optimum):	10 ml of right-heart blood
Specimen Volume (Minimum):	N/A
Collect:	Best collected before body is handled too much or opened. Decontaminate skin or seal surface of heart or other organ before inserting needle.
Form:	MDH Form #4676 Infectious Agents: Culture/Detection (Order Forms: 443-681-3777 or form may be downloaded from MDH Laboratory website). **Indicate specimen type using the "Specimen Code" on form.**
Packaging and Shipping*:	Specimens must be packaged in a triple packaging system to ensure that under normal conditions of transport they cannot break, be punctured or leak their contents (Refer to pages 9 & 10 for triple packing guidance). ***Refer to current Federal regulations for specific shipping requirements.**
Transport Conditions:	Room temperature
Continued Next Page>	

Specimen Rejection Criteria:	The following rejection criteria are designed to prevent the reporting of inaccurate results and to avoid misleading information that might lead to misdiagnosis and inappropriate therapy. A request for a new specimen will provide appropriate materials and clinically relevant information to support good patient care. ▪ Unlabeled or improperly labeled specimen ▪ Non-sterile or leaking container ▪ Inappropriate specimen transport conditions ▪ Illegible, or no submitter information on the request form ▪ Mismatched form and specimen ▪ Broken specimen/sample container ▪ The wrong specimen for test request ▪ Inappropriate outfit for requested test ▪ Illegible or no patient information on the specimen ▪ Expired transport media
Availability:	Monday through Friday
Results and Interpretation:	If ≤ 3 organisms then Genus/species. If ≥ 3 organisms – no identification (hold organism for 10 days).
Reference Range:	No growth after seven (7) days incubation.
Additional Information:	N/A
Purpose of Test:	Assist Medical Examiner to establish the cause of death.
Method:	Culture, biochemical, and MALDI-TOF.
Interfering Substances:	Antibiotic therapy
Testing Site:	MD Department of Health Laboratories Administration, Central Laboratory 1770 Ashland Avenue, Baltimore, Maryland 21205
Comment:	N/A

TEST:	**Bordetella Pertussis Culture**
Synonym:	Pertussis, Whooping cough; *B. pertussis* culture, PCR
Laboratory/Phone:	Microbiology: 443-681-3952
Turnaround Time:	7-10 days [from receipt in the Laboratory], preliminary as soon as positive is detected.
Specimen Required:	Nasopharyngeal aspirates or nasopharyngeal swabs are both acceptable. Throat swabs are less suitable since *B. pertussis* exhibits tropism for ciliated respiratory epithelium, which is not found in the pharynx. However, throat swabs may be suitable for PCR diagnosis. Dacron™ swabs are to be used for both culture and PCR. Cotton-tipped swabs are to be avoided since they contain fatty acids that are toxic and may inhibit the growth of *B. pertussis*.
Specimen Identification:	Specimen should be labeled with patient's last and first name, patient's address, DOB, specimen type/source, and the date and time of collection. The specimen/sample must be properly labeled and match the test requisition or electronic test order.
Specimen Volume (Optimum):	Culture: Nasopharyngeal specimen on Dacron™ swab inserted in Regan-Lowe transport media. PCR: Nasopharyngeal specimen on Dacron™ swab, submitted in Regan-Lowe transport media.
Specimen Volume (Minimum):	N/A
Collect:	Collect according to kit instructions. To order Pertussis culture kit, call 443-681-3777. Use Dacron™-tipped swabs only. 1. Remove swabs from sterile package. 2. Infants and young children should be supine. The infant/child's head must be held immobile by an assistant. 3. Pass two (2) swabs simultaneously through one nostril and gently along the floor of the nasopharyngeal cavity until it reaches the posterior nares. **NOTE: Do not force swabs.** Obstructions may be due to septal deviation. 4. Gently rotate both swabs together and leave in nasopharynx for 15 to 30 seconds to absorb mucus. 5. Repeat procedure through other nostril using the same two (2) swabs. 6. Place each swab into a separate tube of transport media, run the swab (streak) up the agar and then put the swab into the media. 7. Label both transport tubes with patient's name and place each tube back into the Ziploc bag.
Continued Next Page>	

Form:	MDH Form #4676 Infectious Agents: Culture/Detection (Order Forms: 443-681-3777 or form may be downloaded from MDH Laboratory website). **Indicate specimen type using the "Specimen Code" on form.**
Packaging and Shipping*:	Specimens must be packaged in a triple packaging system to ensure that under normal conditions of transport they cannot break, be punctured or leak their contents (Refer to pages 9 & 10 for triple packing guidance). ***Refer to current Federal regulations for specific shipping requirements.**
Transport Conditions:	**Best results are obtained by transporting specimen at room temperature the same day taken. If delays are expected (not transported the same day), place inoculated tubes into an incubator at 35-37°C. Cooled transport of the specimen significantly decreases the number of bacteria.**
Specimen Rejection Criteria:	The following rejection criteria are designed to prevent the reporting of inaccurate results and to avoid misleading information that might lead to misdiagnosis and inappropriate therapy. A request for a new specimen will provide appropriate materials and clinically relevant information to support good patient care. ▪ Unlabeled or improperly labeled specimen ▪ Non-sterile or leaking container ▪ Inappropriate specimen transport conditions ▪ Illegible, or no submitter information on the request form ▪ Mismatched form and specimen ▪ Broken specimen/sample container ▪ The wrong specimen for test request ▪ Inappropriate outfit for requested test ▪ Illegible or no patient information on the specimen ▪ Expired transport media ▪ Regan-Lowe media not used ▪ Media expired ▪ Specimen frozen ▪ Unlabeled specimen or name discrepancy between specimen and request label ▪ Prolonged delay in transport (usually more than 72 hours)
`Availability:	Monday through Friday
Results and Interpretation:	N/A
Reference Range:	No Bordetella pertussis cultured or detected.
Additional Information:	The best yield is obtained when culture and PCR are used to diagnose this infection.
Purpose of Test:	Culture: Isolate and identify *B. pertussis* and *B. parapertussis*; establish diagnosis of whooping cough. PCR: Detect the presence of *B. pertussis* nucleic acid (DNA).
Method:	Culture: isolation and identification using culture DFA: direct fluorescent antibody stain PCR: Polymerase chain reaction, real-time
Interfering Substances:	N/A
Testing Site:	MD Department of Health Laboratories Administration, Central Laboratory 1770 Ashland Avenue, Baltimore, Maryland 21205
Comment:	N/A

TEST:	**Bordetella pertussis PCR** **PCR cannot be ordered independently of culture (See Bordetella pertussis culture). Both assays are performed in parallel**
Synonym:	B. pertussis, pertussis, Whooping Cough
Laboratory/Phone:	Molecular Biology: 443-681-3924
Turnaround Time:	2-3 Business Days
Specimen Required:	Nasopharyngeal specimen on Dacron swab, submitted in Regan-Lowe transport media.
Specimen Identification:	Specimen should be labeled with patient's name, and date of collection. The specimen/sample must be properly labeled and match the test requisition or electronic test order.
Specimen Volume (Optimum):	N/A Nasopharyngeal swab
Specimen Volume (Minimum):	N/A Nasopharyngeal swab
Continued Next Page>	

Collect:	To order Pertussis PCR/culture kit, call 443-681-3777. Collect according to kit instructions. Use Dacron™-tipped swabs only. 1. Remove swabs from sterile package. 2. Infants and young children should be supine. The infant/child's head must be held immobile by an assistant. 3. Pass two (2) swabs simultaneously through one nostril and gently along the floor of the nasopharyngeal cavity until it reaches the posterior nares. **NOTE: Do not force swabs.** Obstructions may be due to septal deviation. 4. Gently rotate both swabs together and leave in nasopharynx for 15 to 30 seconds to absorb mucus. 5. Repeat procedure through other nostril using the same two (2) swabs. 6. Place each swab into a separate tube of transport media, run the swab (streak) up the agar and then put the swab into the media. 7. Label both transport tubes with patient's name and place each tube back into the Ziploc bag.
Form:	MDH Form #4676 Infectious Agents: Culture/Detection (Order Forms: 443-681-3777 or form may be downloaded from MDH Laboratory website). **Indicate specimen type using the "Specimen Code" on form.**
Packaging and Shipping*:	Specimens must be packaged in a triple packaging system to ensure that under normal conditions of transport they cannot break, be punctured or leak their contents (Refer to Page 9 & 10). ***Refer to current Federal regulations for specific shipping requirements.**
Transport Conditions:	Best results are obtained by transporting specimen at room temperature the same day taken. If delays are expected (not transported the same day), place inoculated tubes into an incubator at 35-37°C. Cooled transport of the specimen significantly decreases the number of bacteria.
Specimen Rejection Criteria:	The following rejection criteria are designed to prevent the reporting of inaccurate results and to avoid misleading information that might lead to misdiagnosis and inappropriate therapy. A request for a new specimen will provide appropriate materials and clinically relevant information to support good patient care. ▪ Non-sterile or leaking container ▪ Inappropriate specimen transport conditions ▪ Illegible, or no submitter information on the request form ▪ Broken specimen/sample container ▪ The wrong specimen for test request ▪ Inappropriate outfit for requested test ▪ Illegible or no patient information on the specimen ▪ Expired transport media ▪ Regan-Lowe media not used ▪ Media expired ▪ Specimen frozen ▪ Unlabeled specimen or name discrepancy between specimen and request label ▪ Prolonged delay in transport (usually more than 72 hours)
Availability:	Monday through Friday
Results and Interpretation:	Positive: B. pertussis **DNA WAS DETECTED** by real time PCR Negative: B. pertussis **DNA WAS NOT DETECTED** by real time PCR
Additional Information:	**PCR cannot be ordered independent of culture. Both assays are performed in parallel**
Purpose of Test:	Detect the presence of B. pertussis nucleic acid (DNA).
Method:	PCR: Polymerase chain reaction, real-time
Interfering Substances:	N/A
Testing Site:	MD Department of Health Laboratories Administration, Central Laboratory 1770 Ashland Avenue, Baltimore, Maryland 21205
Comment:	N/A

TEST:	**Bordetella Pertussis Toxin IgG Antibody**
Synonym:	Anti-pertussis toxin IgG, Anti-PT IgG
Laboratory/Phone:	Vaccine Preventable Disease/443-681-3889
Turnaround Time:	**2-5 business days**
Specimen Required:	Serum
Specimen identification:	The specimen/sample must be properly labeled and include patient's name or unique patient/sample identifier matching the test requisition or electronic test order.
Specimen Volume (Optimum):	5 ml. (Whole blood) or 4 ml. (Serum)
Specimen Volume (Minimum):	3 ml. (Whole blood) or 2 ml. (Serum)
Collect:	Red-top vacutainer or Serum Separator ("Tiger" or gold top) vacutainer
Form:	**For outbreak investigation use only. Prior approval by MDH Epidemiology (410-767-6628) required. Specific specimen criteria applies, for details call 443-681-3889**
Transport Conditions:	Ambient temperature for specimens on the blood clot (whole blood specimens transported on ice packs are acceptable), separated serum at 2-8°C (refrigerated) or -20°C (frozen). Refrigerated specimen must be tested within 7 days of collection.
Packaging and Shipping:	Specimens must be packaged in a triple packaging system to ensure that under normal conditions of transport they cannot break, be punctured or leak their contents (Refer to pages 9 & 10 for triple packing guidance). ***Refer to current Federal regulations for specific shipping requirements.**
Specimen Rejection Criteria:	Specimen from patients vaccinated against B. pertussis in <6 months or patients <11 years of age cannot be tested. Discrepancy between name on tube and name on form, unlabeled specimen, insufficient volume, hemolysis, gross bacterial contamination. Specimens collected > 7 days prior to arrival without being frozen.
Availability:	Monday through Friday
Results and Interpretation:	**Results can be used for investigational use only** Pertussis antitoxin IgG level: **Positive:** ≥ 100IU/ml **Negative:** <40 IU/ml **Equivocal:** between 40-100 IU/ml
Additional Information:	For more information, see the CDC link at: https://www.cdc.gov/pertussis/
Purpose of Test:	Test is for detecting elevated antibody titers. This is designed to be used in adult and adolescent populations for epidemiological studies and outbreak response as these patients may not seek medical attention when the isolation of *Bordetella pertussis* by culture or PCR would be likely. At this time, the serologic test results should not be relied for case confirmation of pertussis infection. This assay should not be used to and assess susceptibility/immunity to pertussis or for clinical diagnosis. It is limited to surveillance purposes only.
Method:	ELISA
Interfering Substances:	Cannot test specimen from patients vaccinated against B. pertussis toxin within the last 6 months or from patients <11 years of age.
Testing Site:	MDH Laboratories Administration, Central Laboratory 1770 Ashland Avenue, Baltimore, Maryland 21205
Comment:	**This test is used for surveillance purpose only.**

TEST:	***Borrelia burgdorferi* Serology (Tick-borne Disease Panel)**
Synonym:	*Borrelia burgdorferi* IgG/IgM Antibody, Lyme Disease **Refer to instructions in Tick-Borne Disease Panel**
Laboratory/Phone:	443-681-3938/3931
Specimen Required:	Serum
Results and Interpretation:	**NON-REACTIVE.** Indicates no detectable antibodies to *Borrelia burgdorferi.* A negative result does not exclude a Lyme disease infection. Patients with early stages of infection or who have undergone antibiotic therapy may not produce measurable IgG/IgM antibodies. Additional specimens should be submitted in 2-4 weeks if Borrelia burgdorferi exposure has not been ruled out. **REACTIVE**. Antibodies to *Borrelia burgdorferi* have been detected. Sera from individuals with other pathogenic spirochetal diseases, bacterial and viral infections, and individuals with connective tissue autoimmune diseases or anti-nuclear antibody may also have antibodies which cross-react with *B. burgdorferi.* **EQUIVOCAL**—Immunological status cannot be determined, please re-draw patient in 2-4 weeks
Additional Information:	http://www.cdc.gov/lyme/
Purpose of Test:	For the detection IgG/IgM antibodies to *Borrelia burgdorferi*
Methods:	CLIA—Chemiluminescent Immunoassay, Western Blot
Comment:	Your health care provider has ordered a laboratory test for the presence of Lyme Disease for you. Current Laboratory testing for Lyme Disease can be problematic and standard laboratory tests often result in false negative and false positive results, and if done too early, you may not have produced enough antibodies to be considered positive because your immune response requires time to develop antibodies. If you are tested for Lyme Disease and the results are negative, this does not necessarily mean you do not have Lyme Disease. If you continue to experience unexplained symptoms, you should contact your health care provider and inquire about the appropriateness of retesting or initial or additional treatment. The Western blot test will be used to confirm the presence of *B. burgdorferi* specific antibodies detected by the CLIA screening test on all Positive & Equivocal specimens.

TEST:	**Botulism (*Clostridium botulinum*–Adult and *Clostridium botulinum*–Infant)** Must have consent of the State Epidemiologist before sending specimen to the Laboratory (410-767-6685).
Synonym:	Botulism; *Clostridium botulinum*: Refer to instructions for ***Clostridium botulinum*–Adult** and ***Clostridium botulinum*–Infant**.
Laboratory/Phone:	Office of Laboratory Emergency Preparedness and Response: **410-925-3121 (24/7 emergency contact number)** Select Agents Microbiology Laboratory: 443-681-3954 Division of Microbiology Laboratory: 443-681-3952

TEST:	***Brucella* serology (CDC Referral)**
Synonym:	*Bang's Disease, Undulant fever, Malta Fever*
Laboratory/Phone:	443-681-3938/3931
Turnaround Time:	2 weeks (CDC Referral)
Specimen Required:	Serum
Specimen identification:	Label tube with patients first and last name. The specimen/sample must be properly labeled and match the test requisition or electronic test order.
Specimen Volume (Optimum):	2 ml. (Whole Blood)
Specimen Volume (Minimum):	1 ml. (Whole Blood)
Collect:	Red-top vacutainer
Form:	MDH Form #4677 Serological Testing (Order Forms: 443-681-3777 or form may be downloaded from MDH Laboratory website). **Indicate specimen type using the "Specimen Code" on form.**
Packaging and Shipping*:	Specimens must be packaged in a triple packaging system to ensure that under normal conditions of transport they cannot break, be punctured or leak their contents (Refer to pages 9 & 10 for triple packing guidance). ***Refer to current Federal regulations for specific shipping requirements.**
Transport Conditions:	Ambient temperature for specimens on the blood clot (whole blood specimens transported on ice packs are acceptable), separated serum at 2-8°C (refrigerated) or -20°C (frozen).
Specimen Rejection Criteria:	Hemolysis; insufficient volume
Availability:	Monday through Friday
Results and Interpretation:	Given on CDC report
Additional Information:	*http://www.cdc.gov/brucellosis/index.html*
Purpose of Test:	Detect antibody to Brucella
Method:	Brucella microagglutination test (BMAT)
Interfering Substances:	No serology available for B. canis or RB51. May have poor sensitivity for chronic or complicated brucellosis.
Processing Site for CDC referral:	MD Department of Health Laboratories Administration, Central Laboratory 1770 Ashland Avenue, Baltimore, Maryland 21205
Comment:	**Contact the MD Department of Health Epidemiologist at (410)767-6700 for prior approval of specimen submission. Required supplemental information: Exposure and travel history, include other relevant risk factors; clinical symptoms, treatment and relevant lab results.**

TEST:	***Brucella* species, culture**
Synonym:	Bang's Disease, Undulant fever, Malta Fever, and Rock of Gibraltar Fever
Laboratory/Phone:	Office of Laboratory Emergency Preparedness and Response: **410-925-3121 (24/7 emergency contact number)** Select Agents Microbiology Laboratory: 443-681-3954 Division of Microbiology Laboratory: 443-681-3952
Turnaround Time:	5 - 30 days [from specimen receipt in the Laboratory]
Specimen Required:	1. Blood or bone marrow 2. Spleen, liver or abscess 3. Serum-acute and convalescent-phases 4. Isolate
Specimen Identification:	Specimen should be labeled with patient's last and first name, patient's address, DOB, specimen type/source, and the date and time of collection. The specimen/sample must be properly labeled and match the test requisition or electronic test order.
Specimen Volume (Optimum):	N/A
Specimen Volume (Minimum):	N/A
Continued Next Page>	

Collect:	1. Blood: Collect appropriate blood volume and number of sets per routine laboratory protocol. Specimens should be inoculated into appropriate culture media within two (2) hours of collection. 2. Biopsied Tissue: Collect per laboratory protocol. Tissues must be kept moist; add several drops of sterile saline if necessary. 3. Serum: At least 1 ml of serum. Follow standard laboratory protocol. Preferably serum refrigerated. 4. Isolate: Pure culture, 24 hours old, growing on a sheep blood agar plate or slant.
Form:	MDH Form #4676 Infectious Agents: Culture/Detection (Order Forms: 443-681-3777 or form may be downloaded from MDH Laboratory website). **Indicate specimen type using the "Specimen Code" on form**
Packaging and Shipping*:	Specimens must be packaged in a triple packaging system to ensure that under normal conditions of transport they cannot break, be punctured or leak their contents (Refer to pages 9 & 10 for triple packing guidance). ***Refer to current Federal regulations for specific shipping requirements.**
Transport Conditions:	1. Blood Cultures: Transport at room temperature. Hold them at ambient temperature until they are incubated. DO NOT REFRIGERATE. 2. Tissue: Transport at room temperature, adding several drops of sterile normal saline to keep tissues moist for immediate processing. Keep the specimen chilled if the processing of the specimen will be delayed. 3. Serum: Keep serum on cold packs. 4. Isolates: Transport at room temperature on a sealed sheep blood agar plate or slant.
Specimen Rejection Criteria	The following rejection criteria are designed to prevent the reporting of inaccurate results and to avoid misleading information that might lead to misdiagnosis and inappropriate therapy. A request for a new specimen will provide appropriate materials and clinically relevant information to support good patient care. ▪ Unlabeled or improperly labeled specimen ▪ Non-sterile or leaking container ▪ Inappropriate specimen transport conditions ▪ Illegible, or no submitter information on the request form ▪ Mismatched form and specimen ▪ Broken specimen/sample container ▪ The wrong specimen for test request ▪ Inappropriate outfit for requested test ▪ Illegible or no patient information on the specimen ▪ Expired transport media
Availability:	24 hours/day, 7days/week
Results and Interpretation:	Brucella species isolated/detected Brucella species not found
Additional Information:	***Call 410-925-3121 before sending specimen to the Laboratory.***
Purpose of Test:	To confirm the diagnosis of Brucella species.
Method:	LRN protocols
Interfering Substances:	N/A
Testing Site:	MD Department of Health Laboratories Administration, Central Laboratory 1770 Ashland Avenue, Baltimore, Maryland 21205
Comment:	**Brucella species are highly infectious. *PLEASE* use a biological safety cabinet when working with specimens suspected of being Brucella species.** ***Call 410-925-3121 before sending to the laboratory.***

TEST:	***Burkholderia mallei* and *Burkholderia pseudomallei***
Synonym:	*B. mallei* is the causative agent of Glanders; and *B. pseudomallei* is the causative agent of Melioidosis
Laboratory/Phone:	Office of Laboratory Emergency Preparedness and Response: **410-925-3121 (24/7 emergency contact number)** Select Agents Microbiology Laboratory: 443-681-3954 Division of Microbiology Laboratory: 443-681-3952
Turnaround Time:	4 - 8 days [from specimen receipt in the Laboratory]
Continued Next Page>	

Specimen Required:	1. Blood: Collect blood specimens before antibiotics are administered. 2. Urine 3. Abscesses, tissue aspirates, body fluids: Collect tissues and fluids rather than swabs, when possible. 4. Isolate
Specimen Identification:	Specimen should be labeled with patient's last and first name, patient's address, DOB, specimen type/source, and the date and time of collection. The specimen/sample must be properly labeled and match the test requisition or electronic test order.
Specimen Volume (Optimum):	1. Blood: Collect appropriate volume and number of sets per laboratory protocol. 2. Urine: 5 ml. 3. Abscesses, tissues and body fluids: Collect per routine laboratory protocol.
Specimen Volume (Minimum):	N/A
Collect:	1. Blood: Collect appropriate blood volume and number of sets as per routine laboratory protocol. 2. Urine: Collect 5 ml. of midstream clean-catch specimen or a cauterization specimen. 3. Abscesses, tissues aspirates, body fluids: Collect tissues and body fluids rather than swabs. 4. Isolate: Pure culture, 24 hours old, growing on a sheep blood agar plate or slant.
Form:	MDH Form #4676 Infectious Agents: Culture/Detection (Order Forms: 443-681-3777 or form may be downloaded from MDH Laboratory website). **Indicate specimen type using the "Specimen Code" on form.**
Packaging and Shipping*:	Specimens must be packaged in a triple packaging system to ensure that under normal conditions of transport they cannot break, be punctured or leak their contents (Refer to pages 9 & 10 for triple packing guidance). ***Refer to current Federal regulations for specific shipping requirements.**
Transport Conditions:	1. Blood: Transport at room temperature. Hold them at ambient temperature until they are incubated. DO NOT REFRIGERATE. 2. Urine: Transport in a sterile, well-sealed container chilled using wet ice or cold packs. 3. Abscesses, tissues, and fluids: Transport the specimen at room temperature for immediate processing. Keep the specimen chilled if processing of the specimen will be delayed. 4. Isolate: Transport the specimen at room temperature on a sealed sheep blood agar plate or slant.
Specimen Rejection Criteria:	The following rejection criteria are designed to prevent the reporting of inaccurate results and to avoid misleading information that might lead to misdiagnosis and inappropriate therapy. A request for a new specimen will provide appropriate materials and clinically relevant information to support good patient care. ▪ Unlabeled or improperly labeled specimen ▪ Non-sterile or leaking container ▪ Inappropriate specimen transport conditions ▪ Illegible, or no submitter information on the request form ▪ Mismatched form and specimen ▪ Broken specimen/sample container ▪ The wrong specimen for test request ▪ Inappropriate outfit for requested test ▪ Illegible or no patient information on the specimen ▪ Expired transport media
Availability:	24 hours/day, 7 days/week
Results and Interpretation:	*B. mallei/B. pseudomallei* isolated/detected. *B. mallei/B. pseudomallei* not found.
Additional Information:	***Call 410-925-3121 before sending specimen to the Laboratory.***
Purpose of Test:	To confirm the diagnosis of *B. mallei* and *B. pseudomallei*.
Method:	LRN Protocols
Interfering Substances:	N/A
Testing Site:	MD Department of Health Laboratories Administration, Central Laboratory 1770 Ashland Avenue, Baltimore, Maryland 21205
Comment:	***Call 410-925-3121 before sending to the Laboratory.***

TEST:	***C. difficile* Toxin (A and B)**
Synonym:	*Clostridium difficile* toxin, C. diff
Laboratory/Phone:	Microbiology: 443-681-3952
Turnaround Time:	Two (2) days [from specimen receipt in the Laboratory]
Specimen Required:	Fresh, unpreserved stool specimen
Specimen Identification:	Specimen should be labeled with patient's last and first name, patient's address, DOB, specimen type/source, and the date and time of collection. The specimen/sample must be properly labeled and match the test requisition or electronic test order.
Specimen Volume (Optimum):	Two (2) grams
Specimen Volume (Minimum):	N/A
Collect:	Stool in a clean, unpreserved stool transport vial
Form:	MDH Form #4676 Infectious Agents: Culture/Detection (Order Forms: 443-681-3777 or form may be downloaded from MDH Laboratory website). **Indicate specimen type using the "Specimen Code" on form.**
Packaging and Shipping*:	Specimens must be packaged in a triple packaging system to ensure that under normal conditions of transport they cannot break, be punctured or leak their contents (Refer to pages 9 & 10 for triple packing guidance). ***Refer to current Federal regulations for specific shipping requirements.**
Transport Conditions:	Unpreserved, shipped in insulated container with freezer pack
Specimen Rejection Criteria:	The following rejection criteria are designed to prevent the reporting of inaccurate results and to avoid misleading information that might lead to misdiagnosis and inappropriate therapy. A request for a new specimen will provide appropriate materials and clinically relevant information to support good patient care. ▪ Unlabeled or improperly labeled specimen ▪ Non-sterile or leaking container ▪ Inappropriate specimen transport conditions ▪ Illegible, or no submitter information on the request form ▪ Mismatched form and specimen ▪ Broken specimen/sample container ▪ The wrong specimen for test request ▪ Inappropriate outfit for requested test ▪ Illegible or no patient information on the specimen ▪ Expired transport media ▪ Formed stool ▪ Stool preserved in 10% formalin, SAF, or PVA
Availability:	Monday through Friday
Results and Interpretation:	Positive (Toxin A and/or Toxin B present) or Negative (No Toxin A or Toxin B detected)
Reference Range:	Negative
Additional Information:	*Clostridium difficile* can be grown and isolated on a stool culture, but its presence does not indicate whether the strain present is a toxin producer. It also does not distinguish between *C. difficile* colonization and overgrowth/infection.
Purpose of Test:	The *Clostridium difficile* toxin test is used to diagnose antibiotic-associated diarrhea and pseudomembranous colitis that is caused by *C. difficile*. It may also be ordered to detect recurrent disease.
Method:	EIA (Enzyme Immunoassay)
Interfering Substances:	N/A
Testing Site:	Laboratories Administration, Central Laboratory 1770 Ashland Avenue, Baltimore, Maryland 21205
Comment:	This test does not differentiate between Toxin A and Toxin B.

TEST:	***Campylobacter* Culture** **Enteric Culture, Routine (*Salmonella, Shigella, Campylobacter*, and Shiga toxins–producing *E. coli*)**
Synonym:	Stool culture for enteric pathogens; enteric pathogens; stool culture and sensitivity; feces culture: Refer to instructions for **Enteric Culture, Routine (Salmonella, Shigella, Campylobacter, and Shiga toxins–producing *E. coli*)**.
Laboratory/Phone:	Microbiology-Enterics: 443-681-4570

TEST:	**Candida spp. Reference Testing**
Synonym:	Candida identification, Candida speciation, Candida reference culture/ID, ARLN Candida speciation, ARLN Candida testing
Laboratory/Phone:	Microbiology/ARLN 443-681-4569
Turnaround Time:	14 business days
Specimen Required:	Isolate subcultures on sabouraud dextrose agar slant with a leak-proof screw top lid.
Specimen Identification:	Specimen should be labeled with patient's last and first name, patient's address, DOB, specimen type/source, and the date and time of collection. The specimen/sample must be properly labeled and match the test requisition or electronic test order.
Specimen Volume (Optimum):	N/A
Specimen Volume (Minimum):	N/A
Collect:	N/A
Form:	MDH Form #4676 Infectious Agents: Culture/Detection (Order Forms: 443-681-3777 or form may be downloaded from MDH Laboratory website). Indicate "ARLN Candida identification" on the form. **Indicate specimen type using the "Specimen Code" on form**
Packaging and Shipping*:	Specimens must be packaged in a triple packaging system to ensure that under normal conditions of transport they cannot break, be punctured or leak their contents (Refer to pages 9 & 10 for triple packing guidance). ***Refer to current Federal regulations for specific shipping requirements.**
Transport Conditions:	Store and ship at the ambient temperature
Specimen Rejection Criteria:	The following rejection criteria are designed to prevent the reporting of inaccurate results and to avoid misleading information that might lead to misdiagnosis and inappropriate therapy. A request for a new specimen will provide appropriate materials and clinically relevant information to support good patient care. ▪ Unlabeled or improperly labeled specimen ▪ Non-sterile or leaking container ▪ Inappropriate specimen transport conditions ▪ Illegible, or no submitter information on the request form ▪ Mismatched form and specimen ▪ Broken specimen/sample container ▪ The wrong specimen for test request ▪ Inappropriate outfit for requested test ▪ Illegible or no patient information on the specimen ▪ Expired transport media ▪ Specimen received after prolonged delay (usually more than 72 hours) ▪ Grossly contaminated specimens
Availability:	Monday through Friday
Results and Interpretation:	Identification of submitted isolate and antifungal susceptibility testing (AFST) if applicable
Reference Range:	CLSI Guidelines and epidemiological cutoff values
Additional Information:	N/A
Purpose of Test:	Identification and if appropriate, antifungal susceptibilities of potentially pathogenic organisms
Method:	MALDI-TOF for ID, microbroth dilution for AFST
Interfering Substances:	N/A
Testing Site:	MD Department of Health Laboratories Administration, Central Laboratory 1770 Ashland Avenue, Baltimore, Maryland 21205
Comment:	N/A

TEST:	Carbapenem Resistant Enterobacteriaceae reference testing
Synonym:	CRE reference testing, carbapenem resistance testing, ARLN CRE testing
Laboratory/Phone:	Microbiology/ARLN 443-681-4569
Turnaround Time:	10 business days
Specimen Required:	Isolate subcultured on agar slant with a leak-proof screw top lid. Isolate submitted should be a pure culture of an Enterobacteriaceae, Pseudomonas aeriginosa, or Acintobacter baumanii complex that displays characteristics of a carbapenem resistant organism (Intermediate or Resistant to one or multiple of the carbapenems, positive for carbapenemase production, or carries a detected carbapenemase gene).
Specimen Identification:	Specimen should be labeled with patient's last and first name, patient's address, DOB, specimen type/source, and the date and time of collection. The specimen/sample must be properly labeled and match the test requisition or electronic test order.
Specimen Volume (Optimum):	N/A
Specimen Volume (Minimum):	N/A
Collect:	N/A
Form:	MDH Form #4676 Infectious Agents: Culture/Detection (Order Forms: 443-681-3777 or form may be downloaded from MDH Laboratory website). Indicate "CRE Testing" on the form. **Indicate specimen type using the "Specimen Code" on form.**
Packaging and Shipping*:	Specimens must be packaged in a triple packaging system to ensure that under normal conditions of transport they cannot break, be punctured or leak their contents (Refer to pages 9 & 10 for triple packing guidance). ***Refer to current Federal regulations for specific shipping requirements.**
Transport Conditions:	Store and ship at ambient temperature
Specimen Rejection Criteria:	The following rejection criteria are designed to prevent the reporting of inaccurate results and to avoid misleading information that might lead to misdiagnosis and inappropriate therapy. A request for a new specimen will provide appropriate materials and clinically relevant information to support good patient care. • Unlabeled or improperly labeled specimen • Non-sterile or leaking container • Inappropriate specimen transport conditions • Illegible, or no submitter information on the request form • Mismatched form and specimen • Broken specimen/sample container • The wrong specimen for test request • Inappropriate outfit for requested test • Illegible or no patient information on the specimen • Expired transport media • Specimen received after prolonged delay (usually more than 72 hours) • Specimen grossly contaminated • Submitter organism ID does not match MDPHL organism ID
Availability:	Monday through Friday
Results and Interpretation:	Identification of submitted isolate and antibiotic susceptibility reported with Minimum inhibitory concentrations with S-I-R interpretations following the Clinical Laboratory Standards Institute (CLSI) criteria for organism. A comprehensive PCR panel of carbapenemase genes and mCIM testing is also performed if applicable.
Reference Range:	CLSI guidelines
Additional Information:	N/A
Purpose of Test:	Identification of carbapenemase-producing carbapenem resistant Enterobacteriaceae, Pseudomonas aeriginosa, or Acinetobacter baumanii complex. This data is used for epidemiological purposes
Method:	MALDI-ToF for ID, Microbroth dilution for AST
Interfering Substances:	Administration of antimicrobial agents before specimen collection
Testing Site:	MD Department of Health Laboratories Administration, Central Laboratory 1770 Ashland Avenue, Baltimore, Maryland 21205
Comment:	

TEST:	CDC Referrals (Serology)
Synonym:	CDC's Infectious Diseases Laboratories provides an online Test Directory that allows you to identify the right test for your needs. http://www.cdc.gov/laboratory/specimen-submission/list.html#B
Laboratory/Phone:	443-681-3938/3931
Turnaround Time:	Refer to CDC Test Directory http://www.cdc.gov/laboratory/specimen-submission/list.html#B
Specimen Required:	Serum
Specimen identification:	The specimen/sample must be properly labeled and include patient's name or unique patient/sample identifier matching the test requisition or electronic test order.
Specimen Volume (Optimum):	2 ml. (Whole Blood)
Specimen Volume (Minimum):	1 ml. (Whole Blood)
Collect:	Red-top vacutainer
Form:	MDH Form #4677 Serological Testing (Order Forms: 443-681-3777 or form may be downloaded from MDH Laboratory website). **Indicate specimen type using the "Specimen Code" on form.**
Packaging and Shipping*:	Specimens must be packaged in a triple packaging system to ensure that under normal conditions of transport they cannot break, be punctured or leak their contents (Refer to pages 9 & 10 for triple packing guidance). ***Refer to current Federal regulations for specific shipping requirements.**
Transport Conditions:	See CDC specific transport requirements.
Specimen Rejection Criteria:	Hemolysis; insufficient volume
Availability:	Monday through Friday
Results and Interpretation:	Given on CDC report
Additional Information:	**Call 443-681-3938/3931 before sending specimen to State lab.**
Purpose of Test:	Detect antibodies which may be due to a particular infectious agent
Methods:	Varies
Interfering Substances:	Icteric, hemolyzed, lipemic specimen
Processing Site for CDC referral:	MD Department of Health Laboratories Administration, Central Laboratory 1770 Ashland Avenue, Baltimore, Maryland 21205
Comment:	**Contact the MD Department of Health Epidemiologist at (410)767-6700 for prior approval of specimen submission. Required supplemental information: Exposure and travel history, include other relevant risk factors; clinical symptoms, treatment and relevant lab results.**

TEST:	Chagas disease Serology
Synonym:	*Trypanosoma cruzi*
Laboratory/Phone:	443-681-3938/3931
Turnaround Time:	5 business days
Specimen Required:	Serum
Specimen identification:	The specimen/sample must be properly labeled and include patient's name or unique patient/sample identifier matching the test requisition or electronic test order
Specimen Volume (Optimum):	2 ml. (Whole Blood)
Specimen Volume (Minimum):	1 ml. (Whole Blood)
Collect:	Red-top vacutainer tube
Form:	MDH Form #4677 Serological Testing (Order Forms: 443-681-3777 or form may be downloaded from MDH Laboratory website). **Indicate specimen type using the "Specimen Code" on form.** Date specimen collected **MUST** be provided.
Packaging and Shipping*:	Specimens must be packaged in a triple packaging system to ensure that under normal conditions of transport they cannot break, be punctured or leak their contents (Refer to pages 9 & 10 for triple packing guidance). ***Refer to current Federal regulations for specific shipping requirements.**
Transport Conditions:	Ambient temperature for specimens on the blood clot (whole blood specimens transported on ice packs are acceptable), separated serum at 2-8°C (refrigerated) or -20°C (frozen). If shipping is delayed beyond 5 days, serum must be frozen at -20°C and shipped on dry ice.
Continued Next Page>	

Specimen Rejection Criteria:	Grossly hemolyzed specimens, unlabeled specimen, leaking container, insufficient volume, mismatch between labeling of specimen and test request form, specimen collected > 5 days prior to arrival without being frozen.
Availability:	Monday through Friday
Results and Interpretation:	**NEGATIVE:** Antibodies to T. cruzi have not been detected and there is a high probability of non-infection **or an early infection with low level of antibody present.** **EQUIVOCAL**: The presence or absence of antibody to T. cruzi cannot be established. **POSITIVE:** Antibodies to T. cruzi, the causative agent of Chagas' disease were detected.
Additional Information:	http://www.cdc.gov/parasites/chagas/
Purpose of Test:	Detect antibodies which may be due to *Trypanosoma cruzi*
Methods:	EIA
Interfering Substances:	Hemolysis
Testing Site:	MD Department of Health Laboratories Administration, Central Laboratory 1770 Ashland Avenue, Baltimore, MD 21205
Comment:	Serologic results should not be used as a sole means for diagnosis, treatment, or for the assessment of a patient's health. Clinical correlation is required. Positive and Equivocal results will be forwarded to CDC for confirmation.

TEST:	**Chancroid Culture *(Hemophilus ducreyi*)**
Synonym:	*Haemophilus ducreyi* culture: Refer to instructions for ***Hemophilus ducreyi* Culture**.
Laboratory/Phone:	Microbiology: 443-681-4570

TEST:	**Chikungunya IgM Serology** (Arbovirus Travel-Associated Panel) Test available based on patient's travel history.
Synonym:	**Ar**thropod-**bo**rne **virus: Chikungunya Virus** **Refer to instructions in Arbovirus Travel-Associated Panel**
Laboratory/Phone:	443-681-3936/3931
Results and Interpretation:	**Negative:** No detectable IgM antibody, The result does not rule out Chikungunya virus infection. An additional sample should be tested within 7-14 days if early infection is suspected. **Equivocal:** Chikungunya virus IgM antibody cannot be determined, further testing by PRNT (plaque reduction neutralization test) is required. **Positive:** Presence of detectable IgM antibody, presumptive infection with Chikungunya virus. Confirmatory testing by PRNT (plaque reduction neutralization test) is required. **A positive IgM result may not indicate a recent infection because IgM may persist for several months after infection.**
Additional Information:	https://www.cdc.gov/chikungunya/
Purpose of Test:	For the presumptive detection of IgM antibody to Chikungunya Virus. Confirmatory testing by PRNT may be required.
Method:	EIA (Screening) & PRNT (Plaque Reduction Neutralization Test) referral to the Centers for Disease Control and Prevention (CDC) for confirmatory testing.
Comment:	Results are for epidemiological purposes only. Serologic results should not be used as a sole means for diagnosis, treatment, or for the assessment of a patient's health. Clinical correlation is required.

TEST:	**Chlamydia Cell Culture**
Synonym:	
Laboratory/Phone:	443-681-3937
Turnaround Time:	10 business days
Specimen Required:	Swab: endocervix, urethra, conjunctiva, nasopharynx, throat, rectum, vagina. For other sources, call lab to discuss. Place swab in FlexTrans™ transport tube. (Check expiration date of transport media.)
Specimen Identification:	The specimen/sample must be properly labeled and include: 1. The patient's name or unique patient/sample identifier matching the test requisition or electronic test order, 2. If appropriate, the date and time of specimen/sample collection, and 3. Any additional information relevant and necessary for the test.
Specimen Volume (Optimum):	3ml of media already in transport tube
Specimen Volume (Minimum):	3ml of media already in transport tube
Collect:	Swab placed in FlexTrans™ transport media, or other commercial media stating it is appropriate for Chlamydia
Form:	MDH Form #4676 Infectious Agents: Culture/Detection (Order forms at: 443-681-3777 or form may be downloaded from MDH Laboratory website). **Chlamydia trachomatis located under Virus/Chlamydia heading. Indicate specimen type next to test requested using the "Specimen Code' on form.**
Packaging and Shipping*:	Place tube in a sealed, biohazard transport bag with form in outer pocket
Transport Conditions:	Transport at 2-8°C Must reach the lab within 2 days of collection
Specimen Rejection Criteria:	Too old, No patient ID on specimen, leaked, quantity not sufficient, no swab, expired transport, out of temp. range, no specimen received, broken, improper swab or collection kit, improper collection site, thick mucus, gross contamination, illegible ID, missing or incomplete lab slip (no site, date, gender, patient info., submitter info.), mismatched patient ID.
Availability:	Monday-Friday
Results and Interpretation:	Chlamydia spp. Isolated in cell culture. Chlamydia trachomatis not Isolated in cell culture. Chlamydia trachomatis toxic in cell culture. Resubmit.
Reference Range:	Not applicable.
Additional Information:	This test is limited to medico-legal specimens: cervical, rectal, male urethral; and non-cervical, non-rectal, and non-male urethral specimens.
Purpose of Test:	Diagnostic, qualitative detection of Chlamydia
Method:	Cell culture
Interfering Substances:	A negative result does not exclude the possibility of infection. Interpret results in conjunction with other information. Do not use FlexTrans™ if leakage, evaporation, contamination or pH changes are apparent. Store FlexTrans™ refrigerated. Do not freeze unless <-50°C. If frozen, must transport on dry ice. **This culture confirmation kit will yield positive results with all *Chlamydia trachomatis* types as well as other Chlamydial species but will not differentiate between them.**
Testing Site:	MDH Laboratories Administration, Central Laboratory 1770 Ashland Avenue Baltimore, MD 21205
Comment:	

TEST:	***Chlamydia* Serology**
Synonym:	*Chlamydia* Group antigen antibody **(IgG)** EIA
Laboratory/Phone:	443-681-3938/3931
Turnaround Time:	5 business days
Specimen Required:	Serum
Specimen identification:	The specimen/sample must be properly labeled and include patient's name or unique patient/sample identifier matching the test requisition or electronic test order.
Specimen Volume (Optimum):	2 ml. (Whole Blood)
Specimen Volume (Minimum):	1 ml. (Whole Blood)
Continued Next Page>	

Collect:	Red-top vacutainer tube
Form:	MDH Form #4677 Serological Testing (Order Forms: 443-681-3777 or form may be downloaded from MDH Laboratory website). **Indicate specimen type using the "Specimen Code" on form.** Date specimen collected **MUST** be provided.
Packaging and Shipping*:	Specimens must be packaged in a triple packaging system to ensure that under normal conditions of transport they cannot break, be punctured or leak their contents (Refer to pages 9 & 10 for triple packing guidance). ***Refer to current Federal regulations for specific shipping requirements.**
Transport Conditions:	Ambient temperature for specimens on the blood clot (whole blood specimens transported on ice packs are acceptable), separated serum at 2-8°C (refrigerated) or -20°C (frozen). If shipping is delayed beyond 2 days, serum must be frozen at -20°C and shipped on dry ice.
Specimen Rejection Criteria:	Grossly hemolyzed specimens, unlabeled specimen, leaking container, insufficient volume, mismatch between labeling of specimen and test request form, specimen collected > 2 days prior to arrival without being frozen.
Availability:	Monday through Friday
Results and Interpretation:	**POSITIVE**—Detectable IgG Chlamydial antibodies. Suggest immunological exposure to one or more chlamydial species. **NEGATIVE**—No detectable IgG Chlamydial antibodies. Suggest no prior immunological exposure to chlamydial species. Does not rule out recent exposure and collection of sample prior to development of IgG antibodies. **EQUIVOCAL**—Immunological exposure cannot be assessed.
Additional Information:	This test is not intended to replace culture
Purpose of Test:	For the detection of antibody to Chlamydia group antigen
Method:	EIA
Interfering Substances:	Hemolysis
Testing Site:	MD Department of Health Laboratories Administration, Central Laboratory 1770 Ashland Avenue, Baltimore, Maryland 21205
Comment:	This test does not differentiate between different species of *Chlamydia.* Serologic results should not be used as a sole means for diagnosis, treatment, or for the assessment of a patient's health. Clinical correlation is required

TEST:	***Chlamydia trachomatis* and *Neisseria gonorrhoeae*** **Nucleic Acid Amplification Test (NAAT)**
Synonym:	Hologic Panther® Aptima® Combo 2 Assay
Laboratory/Phone:	Chlamydia Laboratory / 443-681-3937
Turnaround Time:	Within 7 business days
Specimen Required:	Endocervical specimen with unisex swab Male urethral specimen with unisex swab Rectal specimen with multitest swab Vaginal self-collected specimen with multitest swab Vaginal clinician-collected specimen with multitest swab Pharyngeal specimen with multitest swab Male and female urine (first of the void)
Specimen identification:	Label specimen with the full name exactly matching test requisition and date of collection. The specimen/sample must be properly labeled and match the test requisition or electronic test order.
Specimen Volume (Optimum):	Swab: Tube, Prefilled with 2.9 ml of preservation media. Urine: Optimal quality specimen is 20-30 ml of "first of the void" urine collected in a plastic collection cup. Swirl to mix. Using a sterile transfer pipette, transfer 2 ml from cup into labeled Hologic urine transport tube, prefilled with 2.0 ml of preservation media so volume falls between the two fill lines on the tube. Do not surpass the fill line.
Continued Next Page>	

Specimen Volume (Minimum):	Swab: Tube, Prefilled with 2.9 ml of preservation media. Urine: Collect a minimum of 4ml (20-30 best) in a plastic collection cup. Using a sterile transfer pipette, transfer 2 ml from cup into labeled HOLOGIC urine tube prefilled with 2.0 ml of preservation media so volume falls between the two fill lines on the tube. Volume must be above the lower fill line.
Collect:	Swab: HOLOGIC Unisex Collection Kit or Vaginal collection kit for HOLOGIC Aptima 2 Urine: Sterile, preservative-free, leakproof, plastic specimen collection cup. **The patient should not have urinated for at least 1 hour prior to specimen collection.** Collect 20-30 ml of "first of the void urine." Transfer 2ml of swirled neat urine into the HOLOGIC collection tube between the two fill lines. Replace cap tightly.
Form:	MDH Form #4676 Infectious Agents: Culture/Detection (Order Forms: 443-681-3777) **Indicate specimen type next to test requested using the "Specimen Code" on form.**
Packaging and Shipping*:	Specimens must be packaged in a triple packaging system to ensure that under normal conditions of transport they cannot break, be punctured or leak their contents (Refer to pages 9 & 10 for triple packing guidance). ***Refer to current Federal regulations for specific shipping requirements.**
Transport Conditions:	Swabs: 2-30°C. Must test within 60 days of collection. Urine: 2-30°C. Must be in urine transport tube containing preservation media within 24 hours. Must test within 30 days of collection.
Specimen Rejection Criteria:	Too old, No patient ID on specimen, >30 ml of collected urine, leaked, quantity not sufficient, no swab, two swabs, expired transport, out of temp. range, no specimen received, broken, improper swab or collection kit, improper collection site, thick mucus, illegible ID, missing or incomplete lab slip (no site, date, gender, patient info., submitter info.), mismatched patient ID.
Availability:	Monday-Friday
Results and Interpretation:	▪ *Chlamydia trachomatis* RNA was detected by Nucleic Acid Amplification using the Transcription Mediated Amplification (TMA) method. ▪ *Chlamydia trachomatis RNA was not detected by Nucleic Acid Amplification* using the Transcription Mediated Amplification (TMA) method. ▪ *The specimen was Equivocal for Chlamydia trachomatis by Nucleic Acid Amplification* using the Transcription Mediated Amplification (TMA) method. Specimen recollection is required for accurate determination. ▪ *Neisseria gonorrhoeae was detected by Nucleic Acid Amplification* using the Transcription Mediated Amplification (TMA) method. ▪ *Neisseria gonorrhoeae was not detected by Nucleic Acid Amplification* using the Transcription Mediated Amplification (TMA) method. ▪ *The specimen was Equivocal for Neisseria gonorrhoeae by Nucleic Acid Amplification* using the Transcription Mediated Amplification (TMA) method. Specimen recollection is required for accurate determination. ▪ *Specimen failed in assay.* Specimen recollection is required for accurate determination. ▪ *Instrument failure.*
Reference Range:	Not applicable.
Additional Information:	Restricted testing (preapproved submitters only, call 443-681-3937)
Purpose of Test:	Direct, qualitative detection of *Chlamydia trachomatis* and *Neisseria gonorrhoeae* RNA .
Method:	Transcription Mediated Amplification (TMA)
Continued Next Page>	

Interfering Substances/Limitations:	Interfering substances: None Limitations: Assay cannot determine specimen adequacy. Proper collection is imperative. A negative test result does not exclude the possibility of infection. Interpret result in conjunction with other information. Therapeutic failure or success cannot be determined with the Aptima Combo 2 Assay since nucleic acid may persist following appropriate antimicrobial therapy Only cell culture isolation should be used when testing for the evaluation of suggested sexual abuse or other medico-legal purposes. The Aptima Combo 2 Assay provides qualitative results. Therefore, a correlation cannot be drawn between the magnitude of a positive assay signal and the number of organisms in a specimen. Performance of this assay has not been evaluated for patients less than 14 years old. Vaginal self-collected specimens are not approved for home use or outside clinical setting. The presence of mucus inhibits the proper sampling of columnar epithelial cells in endocervical specimens.
Testing Site:	MDH Laboratories Administration, Central Laboratory 1770 Ashland Avenue, Baltimore, Maryland 21205
Comment:	**Rectal and pharyngeal specimens are not an FDA approved specimen type for the Hologic® Aptima® Combo 2 Assay. Performance characteristics of the assay using rectal and pharyngeal specimens were validated by the MDH Laboratories.**

TEST:	***Clostridium botulinum*–Adult** **MUST HAVE CONSENT OF THE STATE EPIDEMIOLOGIST BEFORE SENDING SPECIMEN TO THE LABORATORY (410-767-6685).**
Synonym:	Botulism
Laboratory/Phone:	Office of Laboratory Emergency Preparedness and Response: **410-925-3121 (24/7 emergency contact number)** Select Agents Microbiology Laboratory: 443-681-3954 Division of Microbiology Laboratory: 443-681-3952
Turnaround Time:	3-7 days [from specimen receipt in the Laboratory]
Specimen Required:	Suspected foodborne botulism cases: Suitable specimens for examination are: serum, feces, vomitus, gastric contents. Suspected wound botulism cases: Suitable specimens for examination are: serum, tissue, feces.
Specimen Identification:	Specimen should be labeled with patient's last and first name, patient's address, DOB, specimen type/source, and the date and time of collection. The specimen/sample must be properly labeled and match the test requisition or electronic test order.
Specimen Volume (Optimum):	Serum: At least 10 ml (obtained from using at least 20 ml of whole blood).
Specimen Volume (Minimum):	N/A
Collect:	Serum: Collect using routine laboratory protocol using the red top or separator type tube (NO anticoagulants).
Form:	MDH Form #4676 Infectious Agents: Culture/Detection (Order Forms: 443-681-3777 or form may be downloaded from MDH Laboratory website). **Indicate specimen type using the "Specimen Code" on form.**
Packaging and Shipping*:	Specimens must be packaged in a triple packaging system to ensure that under normal conditions of transport they cannot break, be punctured or leak their contents (Refer to pages 9 & 10 for triple packing guidance). ***Refer to current Federal regulations for specific shipping requirements.**
Transport Conditions:	Serum: Transport to the Laboratory on wet ice or cold packs. If an unavoidable delay of several days is anticipated, the specimen should be kept frozen and then packed in an insulated container with dry ice and proper cushioning material for shipment.
Continued Next Page>	

Specimen Rejection Criteria:	The following rejection criteria are designed to prevent the reporting of inaccurate results and to avoid misleading information that might lead to misdiagnosis and inappropriate therapy. A request for a new specimen will provide appropriate materials and clinically relevant information to support good patient care. ▪ Unlabeled or improperly labeled specimen ▪ Non-sterile or leaking container ▪ Inappropriate specimen transport conditions ▪ Illegible, or no submitter information on the request form ▪ Mismatched form and specimen ▪ Broken specimen/sample container ▪ The wrong specimen for test request ▪ Inappropriate outfit for requested test ▪ Illegible or no patient information on the specimen ▪ Expired transport media
Availability:	24 hours/day, 7 days/week
Results and Interpretation:	*Clostridium botulinum* toxin detected/not detected.
Additional Information:	**To request botulism testing for a suspect case, contact the MDH Infectious Disease Bureau at 410-767-6700 during business hours and after hours call the MDH Emergency Call Center at 410-795-7365 to arrange for an initial infectious disease consultation.**
Purpose of Test:	To confirm the presence of *Clostridium botulinum* toxins
Method:	LRN Methods
Interfering Substances:	If the patient has been taking any medication that might interfere with toxin assays or culturing of the stool, the Laboratory should be notified. For example, it has been demonstrated that anticholinesterase drugs given orally to patients for myasthenia gravis can interfere with mouse botulinum toxin assays of stool extracts.
Testing Site:	MD Department of Health Laboratories Administration, Central Laboratory 1770 Ashland Avenue, Baltimore, Maryland 21205
Comment:	**PHYSICIAN MUST CALL FOR A CONSULT BEFORE SENDING SPECIMEN. SPECIMENS ARE NOT PROCESSED UNTIL THE CASE IS APPROVED FOR TESTING. Contact the MDH Infectious Disease Bureau at 410-767-6700 during business hours and after hours call the MDH Emergency Call Center at 410-795-7365 to arrange for an initial infectious disease consultation.**

TEST:	***Clostridium botulinum*–Infant** **MUST HAVE CONSENT OF THE STATE EPIDEMIOLOGIST BEFORE SENDING SPECIMEN TO THE LABORATORY (410-767-6685).**
Synonym:	Botulism
Laboratory/Phone:	Office of Laboratory Emergency Preparedness and Response: **410-925-3121 (24/7 emergency contact number)** Select Agents Microbiology Laboratory: 443-681-3954 Division of Microbiology Laboratory: 443-681-3952
Turnaround Time:	3-30 days [from specimen receipt in the Laboratory]
Specimen Required:	Suspected infant botulism cases: Suitable specimens: Stool, rectal swabs (not necessary to collect serum.)
Specimen Identification:	Specimen should be labeled with patient's last and first name, patient's address, DOB, specimen type/source, and the date and time of collection. The specimen/sample must be properly labeled and match the test requisition or electronic test order.
Specimen Volume (Optimum):	Stool: 10-50 grams (English walnut size)
Specimen Volume (Minimum):	N/A
Collect:	Stool: Collect in a sterile, well-sealed, unbreakable container. Ship on cold packs. If delayed, freeze stool specimen and ship frozen. Enema (if needed): Use minimal amount of sterile water or non-bacteriostatic water, place 20 ml of liquid into a sterile, well-sealed, unbreakable container.
Form:	MDH Form #4676 Infectious Agents: Culture/Detection (Order Forms: 443-681-3777 or form may be downloaded from MDH Laboratory website). **Indicate specimen type using the "Specimen Code" on form.**
Continued Next Page>	

Packaging and Shipping*:	Specimens must be packaged in a triple packaging system to ensure that under normal conditions of transport they cannot break, be punctured or leak their contents (Refer to pages 9 & 10 for triple packing guidance). ***Refer to current Federal regulations for specific shipping requirements.**
Transport Conditions:	Stool: Transport to the Laboratory on wet ice or cold packs. If an unavoidable delay of several days is anticipated, the specimen should be kept frozen and then packed in an insulated container with dry ice and proper cushioning material for shipment.
Specimen Rejection Criteria:	The following rejection criteria are designed to prevent the reporting of inaccurate results and to avoid misleading information that might lead to misdiagnosis and inappropriate therapy. A request for a new specimen will provide appropriate materials and clinically relevant information to support good patient care. ▪ Unlabeled or improperly labeled specimen ▪ Non-sterile or leaking container ▪ Inappropriate specimen transport conditions ▪ Illegible, or no submitter information on the request form ▪ Mismatched form and specimen ▪ Broken specimen/sample container ▪ The wrong specimen for test request ▪ Inappropriate outfit for requested test ▪ Illegible or no patient information on the specimen ▪ Expired transport media
Availability:	24 hours/day, 7 days/week
Results and Interpretation:	*Clostridium botulinum* toxin detected/not detected.
Additional Information:	**To request botulism testing for a suspect case, contact the MDH Infectious Disease Bureau at 410-767-6700 during business hours and after hours call the MDH Emergency Call Center at 410-795-7365 to arrange for an initial infectious disease consultation.**
Purpose of Test:	To confirm the presence of Clostridium botulinum toxin in the specimen.
Method:	LRN Methods
Interfering Substances:	Glycerin Enema will interfere with the recovery of Clostridium botulinum toxin. If the patient has been taking any medication that might interfere with toxin assays or culturing of the stool, the Laboratory should be notified. For example, it has been demonstrated that anticholinesterase drugs given orally to patients for myasthenia gravis can interfere with mouse botulinum toxin assays of stool extracts.
Testing Site:	MD Department of Health Laboratories Administration, Central Laboratory 1770 Ashland Avenue, Baltimore, Maryland 21205
Comment:	**PHYSICIAN MUST CALL FOR A CONSULT BEFORE SENDING SPECIMEN. SPECIMENS ARE NOT PROCESSED UNTIL THE CASE IS APPROVED FOR TESTING. Contact the MDH Infectious Disease Bureau at 410-767-6700 during business hours and after hours call the MDH Emergency Call Center at 410-795-7365 to arrange for an initial infectious disease consultation.**

TEST:	***Clostridium difficile* toxin**
Synonym:	*C. diff, C. difficile* Toxin (A and B): refer to instructions for *C. diff* Toxin
Laboratory/Phone:	Microbiology 443-681-3952

TEST:	***Clostridium perfringens* Culture**
Synonym:	*Clostridium perfringens* Culture: Refer to instructions for **Foodborne Pathogens (Bacillus cereus, Clostridium perfringens, Staph aureus)**.
Laboratory/Phone:	Microbiology 443-681-3952

TEST:	***Corynebacterium diptheriae* culture (Diptheria)**
Synonym:	*Corynebacterium diptheriae* culture: Refer to instructions for **Diptheria Culture**.
Laboratory/Phone:	Microbiology / 443-681-3952

TEST:	***Coxiella* Serology**
Synonym:	*Coxiella burnetii,* Q fever
Laboratory/Phone:	443-681-3938/3931
Turnaround Time:	5 business days
Specimen Required:	Serum
Specimen identification:	The specimen/sample must be properly labeled and include patient's name or unique patient/sample identifier matching the test requisition or electronic test order.
Specimen Volume (Optimum):	2 ml. (Whole Blood)
Specimen Volume (Minimum):	1 ml. (Whole Blood)
Collect:	Red-top vacutainer tube
Form:	MDH Form #4677 Serological Testing (Order Forms: 443-681-3777 or form may be downloaded from MDH Laboratory website). **Indicate specimen type using the "Specimen Code" on form.** Date specimen collected **MUST** be provided.
Packaging and Shipping*:	Specimens must be packaged in a triple packaging system to ensure that under normal conditions of transport they cannot break, be punctured or leak their contents (Refer to pages 9 & 10 for triple packing guidance). ***Refer to current Federal regulations for specific shipping requirements.**
Transport Conditions:	Ambient temperature for specimens on the blood clot (whole blood specimens transported on ice packs are acceptable), separated serum at 2-8°C (refrigerated) or -20°C (frozen). If shipping is delayed beyond 5 days, serum must be frozen at -20°C and shipped on dry ice.
Specimen Rejection Criteria:	Hemolysis; insufficient volume, specimen collected > 5 days prior to arrival without being frozen
Availability:	Monday through Friday
Results and Interpretation:	Titer ≥ 1:16 in both Phase I and Phase II antigen suggests a C. burnetii infection. Phase I antibody titers of greater than or equal to Phase II antibody titers are consistent with a chronic infection or convalescent phase Q fever. Titers < 1:16 in Phase I with titers >1:256 in Phase II antigen suggests a C. burnetii infection. Titer < 1:16 in both Phase I and Phase II antigen. No antibody detected. This result is seen in persons with either no C. burnetii infection or with an early infection. If Q fever suspected, collect a second specimen in 2-3 weeks. A 4-fold IgG antibody endpoint titer increase is considered supportive evidence of current or recent acute infection.
Additional Information:	http://www.cdc.gov/qfever/
Purpose of Test:	Detect IgG antibodies which may be due to Coxiella burnetii infections
Methods:	Hemolysis, lipemia
Interfering Substances:	Icteric, hemolyzed, lipemic specimen
Testing Site:	MD Department of Health Laboratories Administration, Central Laboratory 1770 Ashland Avenue, Baltimore, MD 21205
Comment:	Serologic responses are time dependent. Specimens obtained too early in the infection may not contain detectable antibody levels. If Q fever is suspected obtain a second specimen 2-3 weeks later.

TEST:	**Coxsackie Virus, Virus Culture**
Synonym:	Coxsackie Virus: Refer to instructions for **Virus Culture**.
Laboratory/Phone:	Virology: 443-681-3934

TEST:	Cryptococcal antigen
Synonym:	*Cryptococcus neoformans* antigen
Laboratory/Phone:	443-681-3938/3931
Turnaround Time:	5 business days
Specimen Required:	Serum or cerebrospinal fluid (CSF)
Specimen identification:	The specimen/sample must be properly labeled and include patient's name or unique patient/sample identifier matching the test requisition or electronic test order.
Specimen Volume (Optimum):	2 ml. (Whole Blood & CSF)
Specimen Volume (Minimum):	1 ml. (Whole Blood & CSF)
Collect:	Red Top vacutainer tube (Whole blood); CSF (Sterile container)
Form:	MDH Form #4677 Serological Testing (Order Forms: 443-681-3777 or form may be downloaded from MDH Laboratory website). **Indicate specimen type using the "Specimen Code" on form.**
Packaging and Shipping*:	Specimens must be packaged in a triple packaging system to ensure that under normal conditions of transport they cannot break, be punctured or leak their contents (Refer to pages 9 & 10 for triple packing guidance). ***Refer to current Federal regulations for specific shipping requirements.**
Transport Conditions:	Collect ASAP after onset. Ship promptly on cold packs. Do not freeze.
Specimen Rejection Criteria:	Hemolysis; insufficient volume
Availability:	Monday through Friday
Results and Interpretation:	**POSITIVE**--*Cryptococcus neoformans* antigen detected. Additional follow-up and culture strongly recommended. **NEGATIVE**—*Cryptococcus neoformans* antigen not detected. If status of patient suggest a cryptococcal infection, subsequent specimens and culture strongly recommended.
Additional Information:	
Purpose of Test:	For the detection of *Cryptococcus neoformans* capsular polysaccharide antigens in serum or CSF
Method:	Latex agglutination
Interfering Substances:	Macroglobulins (e.g. Rheumatoid factors), hemolysis, lipemic
Testing Site:	MD Department of Health Laboratories Administration, Central Laboratory 1770 Ashland Avenue, Baltimore, Maryland 21205
Comment:	Serologic results should not be used as a sole means for diagnosis, treatment, or for the assessment of a patient's health. Clinical correlation is required.

TEST:	Cysticercosis serology (CDC Referral)
Synonym:	Neurocysticercosis, *Taenia solium, cysitcercus*
Laboratory/Phone:	443-681-3938/3931
Turnaround Time:	18 business days (CDC Referral)
Specimen Required:	Serum, plasma, CSF
Specimen identification:	The specimen/sample must be properly labeled and include patient's name or unique patient/sample identifier matching the test requisition or electronic test order
Specimen Volume (Optimum):	2 ml. (Whole Blood & CSF)
Specimen Volume (Minimum):	0.5 ml. (Whole Blood & CSF)
Collect:	Red-top vacutainer tube (serum); lavender- top vacutainer tube (plasma); sterile container (CSF)
Form:	MDH Form #4677 Serological Testing (Order Forms: 443-681-3777 or form may be downloaded from MDH Laboratory website). **Indicate specimen type using the "Specimen Code" on form.**
Packaging and Shipping*:	Specimens must be packaged in a triple packaging system to ensure that under normal conditions of transport they cannot break, be punctured or leak their contents (Refer to pages 9 & 10 for triple packing guidance). ***Refer to current Federal regulations for specific shipping requirements.**
Transport Conditions:	Ambient temperature for specimens on the blood clot (whole blood specimens transported on ice packs are acceptable), separated serum at 2-8°C (refrigerated) or -20°C (frozen).
Availability:	Monday through Friday
Results and Interpretation:	Given on CDC report
Additional Information:	http://www.cdc.gov/parasites/cysticercosis/
Purpose of Test:	For the detection of an antibody response to cysticerci lesions.

Continued Next Page>

Method:	Immunoblot, Western blot, Antibody detection
Interfering Substances:	Substance known to interfere with immunoassays include: bilirubin, lipids, and hemoglobin
Processing Site for CDC referral:	MD Department of Health Laboratories Administration, Central Laboratory 1770 Ashland Avenue, Baltimore, MD 21205
Comment:	**Contact the MD Department of Health Epidemiologist at (410)767-6700 for prior approval of specimen submission. Required supplemental information: Exposure and travel history, include other relevant risk factors; clinical symptoms, treatment and relevant lab results.**

TEST:	**Cytomegalovirus (CMV) Culture**
Synonym:	Cytomegalovirus (CMV): Refer to instructions for **Virus Culture**.
Laboratory/Phone:	Virology: 443-681-3934

TEST:	**Cytomegalovirus Serology**
Synonym:	CMV, Cytomegalovirus IgG antibody
Laboratory/Phone:	443-681-3938/3931
Turnaround Time:	5 business days
Specimen Required:	Serum
Specimen identification:	The specimen/sample must be properly labeled and include patient's name or unique patient/sample identifier matching the test requisition or electronic test order.
Specimen Volume (Optimum):	2 ml. (Whole Blood)
Specimen Volume (Minimum):	1 ml. (Whole Blood)
Collect:	Red-top vacutainer tube
Form:	MDH Form #4677 Serological Testing (Order Forms: 443-681-3777 or form may be downloaded from MDH Laboratory website). **Indicate specimen type using the "Specimen Code" on form.** Date specimen collected **MUST** be provided.
Packaging and Shipping*:	Specimens must be packaged in a triple packaging system to ensure that under normal conditions of transport they cannot break, be punctured or leak their contents (Refer to pages 9 & 10 for triple packing guidance). ***Refer to current Federal regulations for specific shipping requirements.**
Transport Conditions:	Ambient temperature for specimens on the blood clot (whole blood specimens transported on ice packs are acceptable), separated serum at 2-8°C (refrigerated) or -20°C (frozen). Specimens must be tested within 7 days of collection. If shipping is delayed beyond 7 days, serum must be frozen at -20°C and shipped on dry ice.
Specimen Rejection Criteria:	Grossly hemolyzed, icteric, or lipemic specimens, unlabeled specimens, leaking container, insufficient volume, mismatch between labeling of specimen and test request form, specimen collected > 7 days prior to arrival without being frozen.
Availability:	Monday through Friday
Results and Interpretation:	**POSITIVE**-- Presence of detectable CMV IgG antibodies. A positive result generally indicates either recent or past exposure to CMV. **NEGATIVE**—Absence of detectable CMV IgG antibodies. A negative result generally indicates that immunity has not been acquired. If exposure to CMV is suspected despite a negative finding, a second sample should be collected and tested no less than one or two weeks later. **EQUIVOCAL**—Immunological status cannot be assessed. Please submit another sample in one to two weeks.
Additional Information:	
Purpose of Test:	For the detection of antibody to CMV
Method:	CLIA—Chemiluminescent Immunoassay
Interfering Substances:	Hemolysis, lipemia, icterus
Testing Site:	MD Department of Health Laboratories Administration, Central Laboratory 1770 Ashland Avenue, Baltimore, Maryland 21205
Comment:	Serologic results should not be used as a sole means for diagnosis, treatment, or for the assessment of a patient's health. Clinical correlation is required.

TEST:	Deerfly fever
Synonym:	*Francisella tularensis; Pasteurella tularensis*, tularemia, rabbit fever, deerfly fever, Ohara's disease, Francis disease: Refer to instructions for ***Francisella tularensis* Culture**.
Laboratory/Phone:	Office of Laboratory Emergency Preparedness and Response: **410-925-3121 (24/7 emergency contact number)** Select Agents Microbiology Laboratory: 443-681-3954 Division of Microbiology Laboratory: 443-681-3952

TEST:	Dengue Fever IgM Serology (Arbovirus Travel-Associated Panel) Test available based on patient's travel history.
Synonym:	**Ar**thropod-**bo**rne **virus: Dengue Fever** **Refer to instructions in Arbovirus Travel-Associated Panel**
Laboratory/Phone:	443-681-3936/3931
Results and Interpretation:	**Negative:** No detectable IgM antibody, The result does not rule out Dengue virus infection. An additional sample should be tested within 7-14 days if early infection is suspected. **Equivocal:** Dengue virus IgM antibody cannot be determined, further testing by PRNT (plaque reduction neutralization test) is required. **Positive:** Presence of detectable IgM antibody, presumptive infection with Dengue virus. Confirmatory testing by PRNT (plaque reduction neutralization test) is required. **A positive IgM result may not indicate a recent infection because IgM may persist for several months after infection.**
Additional Information:	https://www.cdc.gov/dengue/
Purpose of Test:	For the presumptive detection of IgM antibody to Dengue Virus. Confirmatory testing by PRNT may be required.
Method:	ELISA (Screening). PRNT (Plaque Reduction Neutralization Test) referral to the Centers for Disease Control and Prevention (CDC) for confirmatory testing may be required.
Comment:	Serologic results should not be used as a sole means for diagnosis, treatment, or for the assessment of a patient's health. Clinical correlation is required. Results from immunocompromised patients must be interpreted with caution. Dengue virus IgM serological cross-reactivity with other flavivirus group including Japanese Encephalitis (JEV), West Nile Virus (WNV), Zika Virus (Zika), Saint Louis Encephalitis (SLE), and/or Yellow Fever (YFV) occurs. Any presumptive Dengue positive sera must be confirmed by Plaque Reduction Neutralization Test (PRNT).

TEST:	Diptheria Culture
Synonym:	Corynebacterium diptheriae culture
Laboratory/Phone:	Microbiology 443-681-3952
Turnaround Time:	48-72 hrs. [from specimen receipt in the Laboratory]
Specimen Required:	Respiratory illness: Throat and nasopharyngeal swabs. Cutaneous diphtheria: Skin, throat and nasopharynx.
Specimen Identification:	Specimen should be labeled with patient's last and first name, patient's address, DOB, specimen type/source, and the date and time of collection. The specimen/sample must be properly labeled and match the test requisition or electronic test order.
Specimen Volume (Optimum):	N/A
Specimen Volume (Minimum):	N/A
Collect:	Swab infected areas thoroughly, getting swab well into membranes or other lesions present. Inoculate Stuart Transport Media and break off stick where handled. Leave swab in the tube and tighten cap.
Form:	MDH Form #4676 Infectious Agents: Culture/Detection (Order Forms: 443-681-3777 or form may be downloaded from MDH Laboratory website). **Indicate specimen type using the "Specimen Code" on form.**

Continued Next Page>

Packaging and Shipping*:	Specimens must be packaged in a triple packaging system to ensure that under normal conditions of transport they cannot break, be punctured or leak their contents (Refer to pages 9 & 10 for triple packing guidance). ***Refer to current Federal regulations for specific shipping requirements.**
Transport Conditions:	Room temperature
Specimen Rejection Criteria:	The following rejection criteria are designed to prevent the reporting of inaccurate results and to avoid misleading information that might lead to misdiagnosis and inappropriate therapy. A request for a new specimen will provide appropriate materials and clinically relevant information to support good patient care. ▪ Unlabeled or improperly labeled specimen ▪ Non-sterile or leaking container ▪ Inappropriate specimen transport conditions ▪ Illegible, or no submitter information on the request form ▪ Mismatched form and specimen ▪ Broken specimen/sample container ▪ The wrong specimen for test request ▪ Inappropriate outfit for requested test ▪ Illegible or no patient information on the specimen ▪ Expired transport media
Availability:	Monday through Friday
Results and Interpretation:	Definitive identification of Corynebacterium diptheriae. Toxigenicity testing has to follow identification.
Reference Range:	Corynebacterium diphtheria NOT found.
Additional Information:	Take culture before starting antimicrobial therapy – if possible.
Purpose of Test:	Diagnosis of toxigenic strains of Corynebacterium diptheriae and antibiotic treatment are essential in limiting spread of infection.
Method:	Culture and smear
Interfering Substances:	N/A
Testing Site:	MD Department of Health Laboratories Administration, Central Laboratory 1770 Ashland Avenue, Baltimore, Maryland 21205
Comment:	When C. diptheriae is isolated, the isolate is forwarded to the Centers for Disease Control and Prevention (CDC) for detection of the toxin.

TEST:	**Disk Diffusion Susceptibility Testing**
Synonym:	Disk Diffusion Susceptibility Testing: Refer to instructions for **Antimicrobial Susceptibility Test**
Laboratory/Phone:	Microbiology 443-681-3952

TEST:	***E. coli* O157 typing**
Synonym:	Isolate for *E. coli* O157 serotyping (referral isolate); and other than O157 serotypes.
Laboratory/Phone:	Microbiology-Enterics, 443-681-4570
Turnaround Time:	4 – 10 days [from specimen receipt in the Laboratory]
Specimen Required:	Pure isolate of *E. coli*
Specimen Identification:	Specimen should be labeled with patient's last and first name, patient's address, DOB, specimen type/source, and the date and time of collection. The specimen/sample must be properly labeled and match the test requisition or electronic test order.
Specimen Volume (Optimum):	Sorbitol negative *E. coli* from culture.
Specimen Volume (Minimum):	N/A
Collect:	N/A
Form:	MDH Form #4676 Infectious Agents: Culture/Detection (Order Forms: 443-681-3777 or form may be downloaded from MDH Laboratory website). **Indicate specimen type using the "Specimen Code" on form.**
Packaging and Shipping*:	Specimens must be packaged in a triple packaging system to ensure that under normal conditions of transport they cannot break, be punctured or leak their contents (Refer to pages 9 & 10 for triple packing guidance). ***Refer to current Federal regulations for specific shipping requirements.**
Transport Conditions:	Store and ship at room temperature, ship as quickly as possible.

Continued Next Page>

Specimen Rejection Criteria:	The following rejection criteria are designed to prevent the reporting of inaccurate results and to avoid misleading information that might lead to misdiagnosis and inappropriate therapy. A request for a new specimen will provide appropriate materials and clinically relevant information to support good patient care. ▪ Unlabeled or improperly labeled specimen ▪ Non-sterile or leaking container ▪ Inappropriate specimen transport conditions ▪ Illegible, or no submitter information on the request form ▪ Mismatched form and specimen ▪ Broken specimen/sample container ▪ The wrong specimen for test request ▪ Inappropriate outfit for requested test ▪ Illegible or no patient information on the specimen ▪ Expired transport media
Availability:	Monday through Friday
Results and Interpretation:	*E. coli* O157 identified and H7 antigens identified.
Reference Range:	No *E. coli* O157 detected
Additional Information:	Isolates submitted for *E. coli* O157 typing will be sub-cultured upon arrival and tested for shiga toxins, O157 antigen and biochemically identified as well as tested for H7 if needed.
Purpose of Test:	Detect the presence of *E. coli* O157
Method:	Culture and serotyping
Interfering Substances:	N/A
Testing Site:	MD Department of Health Laboratories Administration, Central Laboratory 1770 Ashland Avenue, Baltimore, Maryland 21205
Comment:	N/A

TEST:	**Eastern Equine Encephalitis Virus Serology (Arbovirus Endemic Panel)**
Synonym:	**Ar**thropod-**bo**rne **virus:** EEEV (Eastern Equine Encephalitis Virus) Refer to instructions for **Arbovirus Endemic Panel**.
Laboratory/Phone:	Virology: 443-681-3936/3931
Results and Interpretation:	**Negative:** No detectable IgM antibody, The result does not rule out Eastern Equine virus infection. **Positive:** Presence of detectable IgM antibody, presumptive infection with EEE virus. Confirmatory testing by PRNT (plaque reduction neutralization test) is required.

TEST:	**Echinococcus serology (CDC Referral)**
Synonym:	*Echinococcosis,* Hydatitd Disease, *Echinococcus granulosus, parasite*
Laboratory/Phone:	443-681-3938/3931
Turnaround Time:	18 business days (CDC Referral)
Specimen Required:	Serum, plasma
Specimen Identification:	The specimen/sample must be properly labeled and include patient's name or unique patient/sample identifier matching the test requisition or electronic test order.
Specimen Volume (Optimum):	2ml. (Whole Blood)
Specimen Volume (Minimum):	0.5ml. (Whole Blood)
Collect:	Red-top vacutainer tube (serum) Lavendar-top vacutainer (plasma)
Form:	MDH Form #4677 Serological Testing (Order Forms: 443-681-3777 or form may be downloaded from MDH Laboratory website). **Indicate specimen type using the "Specimen Code" on form.**
Packaging and Shipping*:	Specimens must be packaged in a triple packaging system to ensure that under normal conditions of transport they cannot break, be punctured or leak their contents (Refer to pages 9 & 10 for triple packing guidance). ***Refer to current Federal regulations for specific shipping requirements.**
Transport Conditions:	Ambient temperature for specimens on the blood clot (whole blood specimens transported on ice packs are acceptable), separated serum at 2-8°C (refrigerated) or -20°C (frozen).
Specimen Rejection Criteria:	Hemolysis; insufficient volume
Continued Next Page>	

Availability:	Monday through Friday
Results and Interpretation:	Given on CDC report
Additional Information:	http://www.cdc.gov/parasites/echinococcosis/
Purpose of Test:	Detect antibodies which may be due Echinococcus parasite infections
Methods:	Immunoblot, Western blot, Antibody detection
Interfering Substances:	Substance known to interfere with immunoassays include: bilirubin, lipids, and hemoglobin
Processing Site for CDC referral:	MD Department of Health Laboratories Administration, Central Laboratory 1770 Ashland Avenue, Baltimore, MD 21205
Comment:	**Contact the MD Department of Health Epidemiologist at (410)767-6700 for prior approval of specimen submission. Required supplemental information: Exposure and travel history, include other relevant risk factors; clinical symptoms, treatment and relevant lab results.**

TEST:	**Echovirus Culture**
Synonym:	Echovirus culture: Refer to instructions for **Virus Culture**.
Laboratory/Phone:	Virology: 443-681-3934

TEST:	**Ehrlichia/Anaplasma Serology (Tick-borne Disease Panel)**
Synonym:	Human Monocytic Ehrlichiosis (HME) or *Ehrlichia chaffeensis* Human Granulocytic Anaplasmosis (HGA) or *Anaplasma phagocytophilum* **Refer to instructions in Tick-Borne Disease Panel**
Laboratory/Phone:	443-681-3938/3931
Specimen Required:	Serum
Results and Interpretation:	**NEGATIVE—**Titer < 1:80 **POSITIVE—**Titer > 1:320 probable recent infection **INDETERMINATE—**Titer >1:80 but <1:320, possible early infection/past exposure with falling titers or cross-reactivity with related organism infections.
Additional Information:	https://www.cdc.gov/ticks/tickbornediseases/anaplasmosis.html https://www.cdc.gov/ticks/tickbornediseases/ehrlichiosis.html
Purpose of Test:	For the detection of IgG antibodies to *Ehrlichia chaffeensis* and *Anaplasma phagocytophilum*
Method:	Immunofluorescence Assay (IFA)
Comment:	May not detect a recent infection, or infection in a person with a severely compromised immune system. A four-fold increase in titer between acute and convalescent serum specimens supports the diagnosis of recent infection. Acute phase sera should be collected within the first week after onset of illness, and convalescent phase sera, 2-4 weeks after onset. Cross reaction between *E. chaffeensis, E. canis* & *E. ewingii* infections can occur. Serology cannot differentiate the species.

TEST:	**Enteric Culture, Routine (Salmonella, Shigella, Campylobacter, and Shiga toxins–producing *E. coli*)**
Synonym:	Stool culture for enteric pathogens; enteric pathogens; stool culture and sensitivity; feces culture.
Laboratory/Phone:	Microbiology - Enterics 443-681-4570
Turnaround Time:	Usually four (4) days to several weeks [from specimen receipt in the Laboratory].
Specimen Required:	Stool in stool culture transport media (Para Pak for Enteric pathogens [orange cap]).

Continued Next Page>

Specimen Identification:	Specimen should be labeled with patient's last and first name, patient's address, DOB, specimen type/source, and the date and time of collection. The specimen/sample must be properly labeled and match the test requisition or electronic test order.
Specimen Volume (Optimum):	1-2 grams fresh stool; 5-10 ml if liquid
Specimen Volume (Minimum):	Rectal swab (less effective than stool specimen). **NOTE: Campylobacter cannot be tested for on specimens submitted on a rectal swab.**
Collect:	Fresh stool in Para Pak for enteric pathogens (Cary-Blair transport media), select portion of stool containing pus, blood or mucous; rectal swab inserted one (1) inch beyond anal sphincter, rotate carefully, withdraw and place in Cary-Blair transport medium.
Form:	MDH Form #4676 Infectious Agents: Culture/Detection (Order Forms: 443-681-3777 or form may be downloaded from MDH Laboratory website).-Check Enteric Routine culture **Indicate specimen type using the "Specimen Code" on form.**
Packaging and Shipping*:	Specimens must be packaged in a triple packaging system to ensure that under normal conditions of transport they cannot break, be punctured or leak their contents (Refer to pages 9 & 10 for triple packing guidance). ***Refer to current Federal regulations for specific shipping requirements.**
Transport Conditions:	Orange top Para-Pak Transport Media: store and ship refrigerated (2-8°C) temperature.
Specimen Rejection Criteria:	The following rejection criteria are designed to prevent the reporting of inaccurate results and to avoid misleading information that might lead to misdiagnosis and inappropriate therapy. A request for a new specimen will provide appropriate materials and clinically relevant information to support good patient care. ▪ Unlabeled or improperly labeled specimen ▪ Non-sterile or leaking container ▪ Inappropriate specimen transport conditions ▪ Illegible, or no submitter information on the request form ▪ Mismatched form and specimen ▪ Broken specimen/sample container ▪ The wrong specimen for test request ▪ Inappropriate outfit for requested test ▪ Illegible or no patient information on the specimen ▪ Expired transport media ▪ Specimen received after prolonged delay (usually more than 96 hours) ▪ Dry specimen ▪ Specimen contaminated with urine or water ▪ Stool containing barium ▪ Insufficient quantity ▪ Specimen frozen
Availability:	Monday through Friday
Results and Interpretation:	Identification of pathogenic enteric organisms and determination of antimicrobial susceptibilities, if clinically appropriate.
Reference Range:	Normal stool flora
Additional Information:	Enteric culture screens routinely for Salmonella, Shigella, Campylobacter, and Shiga toxin – producing *E. coli*. Yersinia culture and Vibrio culture must be specifically indicated as they are not part of routine testing. Same transport media will support the growth and detection of these organisms. Collect specimens early in the course of enteric disease and prior to antimicrobial therapy. Collect 2 or 3 stools on separate days to increase the likelihood of isolating enteric pathogens. DO NOT COLLECT SPECIMEN FROM THE TOILET. AVOID CONTAMINATION WITH URINE.
Purpose of Test:	Isolation, identification and if clinically appropriate, antimicrobial susceptibilities of potentially pathogenic organisms.
Method:	Culture on selective media, staining, biochemical testing, antimicrobial susceptibility testing; EIA (Enzyme Immuno Assay) for *E. coli* O157.
Interfering Substances/Limitations:	Administration of antibiotics, barium
Testing Site:	MD Department of Health Laboratories Administration, Central Laboratory 1770 Ashland Avenue, Baltimore, Maryland 21205
Comment:	N/A

TEST:	Enterohemorrhagic *Escherichia coli* (EHEC)
Synonym:	*E. coli* O157 typing; Isolate for *E. coli* O157 serotyping (referral isolate): Refer to instructions for ***E. coli* O157 typing**.
Laboratory/Phone:	Microbiology-Enterics 443-681-3952

TEST:	Enteroinvasive *Escherichia coli* (EIEC)
Synonym:	*E. coli* O157 typing; Isolate for *E. coli* O157 serotyping (referral isolate): Refer to instructions for ***E. coli* O157 typing**.
Laboratory/Phone:	Microbiology-Enterics 443-681-3952

TEST:	Enterovirus Culture
Synonym:	Enterovirus (including Echovirus, Coxsackie, and Polio): Refer to instructions for **Virus Culture**.
Laboratory/Phone:	Virology: 443-681-3934

TEST:	Epstein Barr Virus Serology
Synonym:	EBV, Epstein Barr Virus
Laboratory/Phone:	443-681-3938/3931
Turnaround Time:	5 business days
Specimen Required:	Serum
Specimen identification:	The specimen/sample must be properly labeled and include patient's name or unique patient/sample identifier matching the test requisition or electronic test order.
Specimen Volume (Optimum):	2 ml. (Whole Blood)
Specimen Volume (Minimum):	1 ml. (Whole Blood)
Collect:	Red-top vacutainer tube
Form:	MDH Form #4677 Serological Testing (Order Forms: 443-681-3777 or form may be downloaded from MDH Laboratory website). **Indicate specimen type using the "Specimen Code" on form.** Date specimen collected **MUST** be provided.
Packaging and Shipping*:	Specimens must be packaged in a triple packaging system to ensure that under normal conditions of transport they cannot break, be punctured or leak their contents (Refer to pages 9 & 10 for triple packing guidance). ***Refer to current Federal regulations for specific shipping requirements.**
Transport Conditions:	Ambient temperature for specimens on the blood clot (whole blood specimens transported on ice packs are acceptable), separated serum at 2-8°C (refrigerated) or -20°C (frozen). Specimens must be tested within 7 days of collection. If shipping is delayed beyond 7 days, serum must be frozen at -20°C and shipped on dry ice.
Specimen Rejection Criteria:	Grossly hemolyzed, icteric, or lipemic specimens, unlabeled specimens, leaking container, insufficient volume, mismatch between labeling of specimen and test request form, specimen collected > 7 days prior to arrival without being frozen.
Availability:	Monday through Friday
Results and Interpretation:	**POSITIVE**—Antibodies detected (EBNA-1(Epstein Barr Nuclear Antigen) denotes previous infection, VCA (Viral Capsid Antigen)-IgM denotes current or reactivated infection, VCA-IgG denotes current or previous infection, when EA (Early Antigen) & VCA-IgG positive may denote chronic or recurrent illness.) **NEGATIVE**—Antibodies not detected (EBNA-1, EA, VCA-IgG, presume susceptible to primary infection, VCA IgM presume no active infection) **EQUIVOCAL**—Immunological status cannot be determined. Please resubmit another specimen in 1-3 weeks.
Additional Information:	
Purpose of Test:	For the detection of antibodies to EBV
Method:	CLIA—Chemiluminescent Immunoassay
Interfering Substances:	Hemolysis, lipemia, icterus
Testing Site:	MD Department of Health Laboratories Administration, Central Laboratory 1770 Ashland Avenue, Baltimore, Maryland 21205

Continued Next Page>

Comment:	This test aids in the diagnosis of Infectious mononucleosis. Serologic results should not be used as a sole means for diagnosis, treatment, or for the assessment of a patient's health. Clinical correlation is required.

TEST:	**Filariasis serology (CDC Referral)**
Synonym:	Wuchereria bancrofti, Brugia malayi, Bancroftian filariasis
Laboratory/Phone:	443-681-3938/3931
Turnaround Time:	18 business days (CDC Referral)
Specimen Required:	Serum; plasma
Specimen identification:	The specimen/sample must be properly labeled and include patient's name or unique patient/sample identifier matching the test requisition or electronic test order
Specimen Volume (Optimum):	2 ml. (Whole Blood)
Specimen Volume (Minimum):	0.5 ml. (Whole Blood)
Collect:	Red-top vacutainer (Serum) or Lavender-top vacutainer (Plasma)
Form:	MDH Form #4677 Serological Testing (Order Forms: 443-681-3777 or form may be downloaded from MDH Laboratory website). Indicate specimen type using the "Specimen Code" on form.
Packaging and Shipping*:	Specimens must be packaged in a triple packaging system to ensure that under normal conditions of transport they cannot break, be punctured or leak their contents (Refer to pages 9 & 10 for triple packing guidance). *Refer to current Federal regulations for specific shipping requirements.
Transport Conditions:	Ambient temperature for specimens on the blood clot (whole blood specimens transported on ice packs are acceptable), separated serum at 2-8°C (refrigerated) or -20°C (frozen).
Specimen Rejection Criteria:	Hemolysis; insufficient volume
Availability:	Monday through Friday
Results and Interpretation:	Given on CDC report
Additional Information:	
Purpose of Test:	Detect antibodies to filaria
Methods:	EIA, ELISA, Antibody Detection
Interfering Substances:	Icteric, hemolyzed, lipemic specimen
Processing Site for CDC referral:	MD Department of Health Laboratories Administration, Central Laboratory 1770 Ashland Avenue, Baltimore, MD 21205
Comment:	**Contact the MD Department of Health Epidemiologist at (410)767-6700 for prior approval of specimen submission. Required supplemental information: Exposure and travel history, include other relevant risk factors; clinical symptoms, treatment and relevant lab results.**

TEST:	**Foodborne Pathogens (*Bacillus cereus, Clostridium perfringens, Staph aureus*)**
Synonym:	Foodborne Pathogenic Microorganisms, Stool Culture for Foodborne Pathogens
Laboratory/Phone:	Microbiology 443-681-3952
Turnaround Time:	3 - 5 days [from specimen receipt in the Laboratory]
Specimen Required:	Stool, unpreserved
Specimen Identification:	Specimen should be labeled with patient's last and first name, patient's address, DOB, specimen type/source, and the date and time of collection. The specimen/sample must be properly labeled and match the test requisition or electronic test order.
Specimen Volume (Optimum):	4 gm
Specimen Volume (Minimum):	N/A
Collect:	Fresh, unpreserved stool in a sterile screw-top jar. Submit within 48 hours.
Form:	MDH Form #4676 Infectious Agents: Culture/Detection (Order Forms: 443-681-3777 or form may be downloaded from MDH Laboratory website). **Indicate specimen type using the "Specimen Code" on form.**
Packaging and Shipping*:	Specimens must be packaged in a triple packaging system to ensure that under normal conditions of transport they cannot break, be punctured or leak their contents (Refer to pages 9 & 10 for triple packing guidance). ***Refer to current Federal regulations for specific shipping requirements.**

Continued Next Page>

Transport Conditions:	Ship on wet ice
Specimen Rejection Criteria:	The following rejection criteria are designed to prevent the reporting of inaccurate results and to avoid misleading information that might lead to misdiagnosis and inappropriate therapy. A request for a new specimen will provide appropriate materials and clinically relevant information to support good patient care. ▪ Unlabeled or improperly labeled specimen ▪ Non-sterile or leaking container ▪ Inappropriate specimen transport conditions ▪ Illegible, or no submitter information on the request form ▪ Mismatched form and specimen ▪ Broken specimen/sample container ▪ The wrong specimen for test request ▪ Inappropriate outfit for requested test ▪ Illegible or no patient information on the specimen ▪ Expired transport media ▪ Stool in preservative ▪ Specimen received after prolonged delay (usually more than 72 hours)
Availability:	Monday through Friday
Results and Interpretation:	*Staph. aureus*: Any amount is significant and is reported as rare, few, moderate, or many. *Bacillus cereus* and *Clostridium perfringens*: colony count of ≥ 100,000 CFU/ml is considered significant.
Reference Range:	(*Staph aureus*: *Bacillus cereus*: *Clostridium perfringens*) not found after 48 hours incubation.
Additional Information:	***Bacillus cereus*:** The symptoms of *B. cereus* diarrheal type food poisoning mimic those of *Clostridium perfringens* food poisoning. The onset of watery diarrhea, abdominal cramps, and pain occurs 6-15 hours after consumption of contaminated food. Nausea may accompany diarrhea, but vomiting (emesis) rarely occurs. Symptoms persist for 24 hours in most instances. The emetic type of food poisoning is characterized by nausea and vomiting within 0.5 to 6 hours after consumption of contaminated foods. Occasionally, abdominal cramps and/or diarrhea may also occur. Duration of symptoms is generally less than 24 hours. ***Clostridium perfringens:*** The common form of *C. perfringens* poisoning is characterized by intense abdominal cramps and diarrhea which begin 8-22 hours after consumption of foods containing large numbers of those *C. perfringens* bacteria capable of producing the food poisoning toxin. The illness is usually over within 24 hours but less severe symptoms may persist in some individuals for 1 or 2 weeks. ***Staph. aureus:*** The onset of symptoms in staphylococcal food poisoning is usually rapid and in many cases acute, depending on individual susceptibility to the toxin, the amount of contaminated food eaten, the amount of toxin in the food ingested, and the general health of the victim. The most common symptoms are nausea, vomiting, retching, abdominal cramping, and prostration. Some individuals may not always demonstrate all the symptoms associated with the illness. In more severe cases, headache, muscle cramping, and transient changes in blood pressure and pulse rate may occur. Recovery generally takes two (2) days; however, it is not unusual for complete recovery to take three (3) days and sometimes longer in severe cases.
Purpose of Test:	To detect the presence of bacteria that may be agents of food poisoning, since the presence of any amount of *Staph aureus* or the presence of large amounts (greater than 100,000 CFU/ml) of *Bacillus cereus* or *Clostridium perfringens* is consistent with a potential hazard to health.
Method:	Culture, isolation and identification of *Bacillus cereus*, *Clostridium perfringens* or *Staph aureus.* Colony count performed on specimens for *Bacillus cereus* and *Clostridium perfringens*.
Interfering Substances:	Stool preservative
Testing Site:	MD Department of Health Laboratories Administration, Central Laboratory 1770 Ashland Avenue, Baltimore, Maryland 21205
Comment:	N/A

TEST:	Francis disease
Synonym:	*Francisella tularensis; Pasteurella tularensis*, tularemia, rabbit fever, deerfly fever, Ohara's disease, Francis disease: Refer to instructions for ***Francisella tularensis Culture***.
Laboratory/Phone:	Office of Laboratory Emergency Preparedness and Response: **410-925-3121 (24/7 emergency contact number)** Select Agents Microbiology Laboratory: 443-681-3954 Division of Microbiology Laboratory: 443-681-3952

TEST:	***Francisella tularensis* Culture**
Synonym:	*Pasteurella tularensis*, tularemia, rabbit fever, deerfly fever, Ohara's disease, Francis disease
Laboratory/Phone:	Office of Laboratory Emergency Preparedness and Response: **410-925-3121 (24/7 emergency contact number)** Select Agents Microbiology Laboratory: 443-681-3954 Division of Microbiology Laboratory: 443-681-3952
Turnaround Time:	2 -7 days [from specimen receipt in the Laboratory]
Specimen Required:	1. Blood Cultures 2. Tissue samples 3. Tissue aspirates (Including lymph node and bone marrow) 4. Isolate 5. Respiratory Specimens: Sputum, BAL, or pleural fluid.
Specimen Identification:	Specimen should be labeled with patient's last and first name, patient's address, DOB, specimen type/source, and the date and time of collection.
Specimen Volume (Optimum):	N/A
Specimen Volume (Minimum):	N/A
Collect:	1. Blood Culture: Collect appropriate blood volume and number of sets per routine laboratory protocol. 2. Tissues or scraping of an ulcer is preferable. A swab of the ulcer is an acceptable alternative. Collect in a sterile container. For small amount tissue samples, add several drops of sterile normal saline to keep the tissue moist. 3. Swabs: Collect a firm sample of the advancing margin of the lesion. If using a swab transport carrier, the swab should be reinserted into the transport package and the swab fabric moistened with the transport medium inside the packet. 4. Aspirate of involved tissue: Collect per routine laboratory protocol. 5. Isolate: Pick a pure culture to a chocolate agar plate or slant.
Form:	MDH Form #4676 Infectious Agents: Culture/Detection (Order Forms: 443-681-3777 or form may be downloaded from MDH Laboratory website). **Indicate specimen type using the "Specimen Code" on form.**
Packaging and Shipping*:	Specimens must be packaged in a triple packaging system to ensure that under normal conditions of transport they cannot break, be punctured or leak their contents (Refer to pages 9 & 10 for triple packing guidance). ***Refer to current Federal regulations for specific shipping requirements.**
Transport Conditions:	1. Blood Cultures: Transport directly to the Laboratory at room temperature. 2. Tissues: Transport in a sterile container. For small sample, add several drops of sterile saline to keep the tissue moist. Transport immediately to the Laboratory at room temperature. If transport is delayed, keep specimen chilled at 2-8°C. 3. Swabs: Transport to the Laboratory using transport carrier at 2-8°C. Room temperature is acceptable. 4. Aspirates: Transport directly to the Laboratory at room temperature. If transporting is delayed keep specimen chilled at 2-8°C. 5. Isolates: Transport the specimen at room temperature on a sealed chocolate agar plate or slant.

Continued Next Page>

Specimen Rejection Criteria:	The following rejection criteria are designed to prevent the reporting of inaccurate results and to avoid misleading information that might lead to misdiagnosis and inappropriate therapy. A request for a new specimen will provide appropriate materials and clinically relevant information to support good patient care. ▪ Unlabeled or improperly labeled specimen ▪ Non-sterile or leaking container ▪ Inappropriate specimen transport conditions ▪ Illegible, or no submitter information on the request form ▪ Mismatched form and specimen ▪ Broken specimen/sample container ▪ The wrong specimen for test request ▪ Inappropriate outfit for requested test ▪ Illegible or no patient information on the specimen ▪ Expired transport media
Availability:	24 hrs./day, 7 days/week
Results and Interpretation:	*Francisella tularensis* isolated/detected. *Francisella tularensis* not found.
Additional Information:	***Call 410-925-3121 before sending specimen to the Laboratory.***
Purpose of Test:	To confirm diagnosis of tularemia by culture.
Method:	LRN Protocols
Interfering Substances:	Isolate must be inoculated unto media that contains cystine (e.g., chocolate agar plate or slant).
Testing Site:	MD Department of Health Laboratories Administration, Central Laboratory 1770 Ashland Avenue, Baltimore, Maryland 21205
Comment:	**Francisella tularensis is highly infectious. *PLEASE* use a biological safety cabinet when working with specimens suspected of harboring *F. tularensis.*** ***Call 410-925-3121 before sending to the Laboratory.***

TEST:	***Francisella tularensis* Serology (Tick-borne Disease Panel)**
Synonym:	*Francisella tularensis*, rabbit fever, deerfly fever, Ohara's disease, Francis disease **Refer to instructions in Tick-Borne Disease Panel**
Laboratory/Phone:	443-681-3938/3931
Specimen Required:	Serum (acute and convalescent preferred)
Results and Interpretation:	Negative—No antibodies to *Francisella tularensis* were detected. Positive—Antibodies to *Francisella tularensis* were detected. (Titer provided)
Additional Information:	https://www.cdc.gov/ticks/tickbornediseases/tularemia.html
Purpose of Test:	For the detection of antibodies to *Francisella tularensis*
Method:	Serum agglutination
Comment:	A known cross reaction exists between *Brucella abortus*. A four-fold increase in titer between acute and convalescent serum specimens supports the diagnosis of recent infection. Acute phase sera should be collected within the first week after onset of illness, and convalescent phase sera, 2-4 weeks after onset.

TEST:	**Genital culture (Bacterial Culture, Routine)**
Synonym:	Aerobic culture, routine culture, genital culture: Refer to instructions for **Bacterial Culture, Routine**.
Laboratory/Phone:	Microbiology 443-681-3952

TEST:	*Giardia* (Ova and Parasites Microscopic Examination)
Synonym:	Giardia, Parasitic identification: Refer to instructions for **Ova and Parasites Microscopic Examination**.
Laboratory/Phone:	Microbiology 443-681-3952 or 443-681-4570

TEST:	Glanders (*Burkholderia mallei*)
Synonym:	Glanders; *Burkholderia* (formerly *Pseudomonas*) *mallei*: Refer to instructions for **Burkholderia mallei and Burkholderia pseudomallei**.
Laboratory/Phone:	Office of Laboratory Emergency Preparedness and Response: **410-925-3121 (24/7 emergency contact number)** Select Agents Microbiology Laboratory: 443-681-3954 Division of Microbiology Laboratory: 443-681-3952

TEST:	Gonorrhea Culture
Synonym:	GC Culture, *Neisseria gonorrhoeae* Culture
Laboratory/Phone:	Microbiology 443-681-3952
Turnaround Time:	2-3 days – minimum [from specimen receipt in the Laboratory]
Specimen Required:	Cervical, rectal, throat, urethral, vaginal
Specimen Identification:	Specimen should be labeled with patient's last and first name, patient's address, DOB, specimen type/source, and the date and time of collection. Don't use china markers – their marking smudges and rubs off when wet or use permanent marker. Label bottom of plate (not lid). [Lot number and expiration date must remain visible on media.] The specimen/sample must be properly labeled and match the test requisition or electronic test order.
Specimen Volume (Optimum):	GC culture plate streaked with Dacron™ swab immediately after collection.
Specimen Volume (Minimum):	N/A
Collect:	Materials*: GC culture plate, Dacron™ swab, CO_2 tablet, resealable plastic bag. Roll swab directly on the medium in a large "Z" (1a) (to provide adequate exposure of the swab to the medium for transfer of organisms.) Cross-streak immediately with a sterile loop (1b). 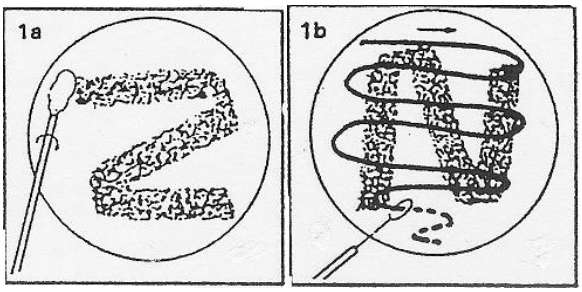 "Z" Pattern Primary Inoculation Cross-Streaked Place inoculated plates in the resealable polyethylene bag (one specimen per patient with accompanying lab slip). Do not seal plate with tape or rubber band. Cut off the corner of one foil-wrapped tablet to expose the tablet and place it in the bag. **DO NOT REMOVE THE TABLET FROM THE FOIL POUCH**. Expel excess air from the bag and completely seal the bag. If using the BD Bio Bag Tube C place the plate in the bag, seal the bag and crush the CO_2 generating ampule. If an incubator is available, incubate the plates in an inverted (medium facing down) position at 35°C until picked up by courier. If an incubator is not available, invert the plates and hold them at room temperature until picked up by the courier. **DO NOT REFRIGERATE AFTER INOCULATING.** When packing plates for transport, keep them inverted and place in a suitable container that will protect them from extreme heat or cold. Keep lab slip separate from specimen to avoid lab slip becoming wet. ***Please do not use damaged plates or less than optimal media.***
Form:	MDH Form #4676 Infectious Agents: Culture/Detection (Order Forms: 443-681-3777 or form may be downloaded from MDH Laboratory website). **Indicate specimen type using the "Specimen Code" on the form and number of hours incubated (if any).**
Packaging and Shipping*:	Specimens must be packaged in a triple packaging system to ensure that under normal conditions of transport they cannot break, be punctured or leak their contents (Refer to pages 9 & 10 for triple packing guidance). ***Refer to current Federal regulations for specific shipping requirements.**

Continued Next Page>

Transport Conditions:	DO NOT REFRIGERATE after specimen is collected. When packing plates for transport, keep them inverted and place in a suitable container that will protect them from extreme heat or cold.
Specimen Rejection Criteria:	The following rejection criteria are designed to prevent the reporting of inaccurate results and to avoid misleading information that might lead to misdiagnosis and inappropriate therapy. A request for a new specimen will provide appropriate materials and clinically relevant information to support good patient care. ▪ Unlabeled or improperly labeled specimen ▪ Non-sterile or leaking container ▪ Inappropriate specimen transport conditions ▪ Illegible, or no submitter information on the request form ▪ Mismatched form and specimen ▪ Broken specimen/sample container ▪ The wrong specimen for test request ▪ Inappropriate outfit for requested test ▪ Illegible or no patient information on the specimen ▪ Expired transport media
Availability:	Monday through Friday
Results and Interpretation:	*Neisseria gonorrhea* isolated and identified. Antibiotic susceptibilities reported.
Reference Range:	No *Neisseria gonorrhea* isolated
Additional Information:	Store unused plates under refrigeration upside down (media facing down). Discard any plate(s) with an expired expiration date or that exhibit growth prior to use (never use contaminated plates). Always allow plates to warm to room temperature before using (cold kills *Neisseria gonorrhea*). Use Dacron™ tipped swabs with plastic shafts (do not use cotton-tipped swabs, as they may contain fatty acids that can interfere with the survival of some organisms. Also do not use calcium alginate-tipped swabs. They can be toxic for some strains of *N. gonorrhoeae*.) Always allow the surface of plates to dry before using (a wet surface hampers isolated colony formation). DO NOT CRUSH OR ADD WATER TO THE CO_2 GENERATING TABLET (CAUSES LOSS OF CO_2 AND POSSIBLE CONTAMINATION BY WATER.) MOISTURE FROM THE MEDIUM WILL ACTIVATE THE CO_2 TABLET. Do not incubate inoculated plates in the clinic longer than 24 hours (over-incubation leads to more growth of contaminating normal flora). If incubated, indicate the number of hours on the test request form. If an incubator is not available, invert the inoculated plates and hold them at room temperature until picked up by the courier. Do not refrigerate after inoculating. When packing plates for transport, keep them inverted and place in a suitable container that will protect them from extreme heat or cold.
Purpose of Test:	Isolation, identification and antibiotic susceptibility testing for *Neisseria gonorrhea*.
Method:	Culture
Interfering Substances:	N/A
Testing Site:	MD Department of Health Laboratories Administration, Central Laboratory 1770 Ashland Avenue, Baltimore, Maryland 21205
Comment:	N/A

TEST:	**Group A Strep Culture**
Synonym:	Beta Strep culture, *Streptococcus pyogenes* culture, throat culture for Group A Strep
Lab/Phone:	Microbiology 443-681-3952
Turnaround Time:	1-2 days [from specimen receipt in the Laboratory]
Specimen Required:	Throat swab
Specimen identification:	Specimen should be labeled with patient's last and first name, patient's address, DOB, specimen type/source, and the date and time of collection. The specimen/sample must be properly labeled and match the test requisition or electronic test order.
Specimen Volume (Optimum):	One (1) throat swab
Specimen Volume (Minimum):	N/A
Collect:	Culturette tube with transport medium
Form:	MDH Form #4676 Infectious Agents: Culture/Detection (Order Forms: 443-681-3777 or form may be downloaded from MDH Laboratory website). **Indicate specimen type using the "Specimen Code" on form.**
Packaging and Shipping*:	Specimens must be packaged in a triple packaging system to ensure that under normal conditions of transport they cannot break, be punctured or leak their contents (Refer to pages 9 & 10 for triple packing guidance). ***Refer to current Federal regulations for specific shipping requirements.**
Transport Conditions:	Store and ship at room temperature, ship as quickly as possible.

Continued Next Page>

Specimen Rejection Criteria:	The following rejection criteria are designed to prevent the reporting of inaccurate results and to avoid misleading information that might lead to misdiagnosis and inappropriate therapy. A request for a new specimen will provide appropriate materials and clinically relevant information to support good patient care. Unlabeled or improperly labeled specimen Non-sterile or leaking container Inappropriate specimen transport conditions Illegible, or no submitter information on the request form Mismatched form and specimen Broken specimen/sample container The wrong specimen for test request Inappropriate outfit for requested test Illegible or no patient information on the specimen Expired transport media
Availability:	Monday through Friday
Results and Interpretation:	Group A Strep isolated and identified
Reference Range:	No Group A Strep detected
Additional Information:	N/A
Purpose of Test:	Detect the presence of Group A Strep
Method:	Culture
Interfering Substances:	N/A
Testing Site:	MD Department of Health Laboratories Administration, Central Laboratory 1770 Ashland Avenue, Baltimore, Maryland 21205
Comment:	N/A

TEST:	**Group A streptococcus (ABCs (previously BIDS))**
Synonym:	Active Bacterial Core Surveillance (ABCs) (Bacterial Invasive Disease Surveillance) Group A streptococcus: Refer to instructions for **ABCs (previously BIDS)**.
Lab/Phone:	Microbiology 443-681-3952

TEST:	**Group B Strep Screen**
Synonym:	Prenatal screen for Group B Strep; Group B Strep culture; Genital Culture
Lab/Phone:	Microbiology 443-681-3952
Turnaround Time:	2-3 days [from specimen receipt in the Laboratory]
Specimen Required:	Vaginal/rectal swab
Specimen identification:	Specimen should be labeled with patient's last and first name, patient's address, DOB, specimen type/source, and the date and time of collection. The specimen/sample must be properly labeled and match the test requisition or electronic test order.
Specimen Volume (Optimum):	One (1) vaginal/rectal swab
Specimen Volume (Minimum):	N/A
Collect:	Culturette tube with transport medium (Amies or Stuart's)
Form:	MDH Form #4676 Infectious Agents: Culture/Detection (Order Forms: 443-681-3777 or form may be downloaded from MDH Laboratory website). **Indicate specimen type using the "Specimen Code" on form.**
Packaging and Shipping*:	Specimens must be packaged in a triple packaging system to ensure that under normal conditions of transport they cannot break, be punctured or leak their contents (Refer to pages 9 & 10 for triple packing guidance). ***Refer to current Federal regulations for specific shipping requirements.**
Transport Conditions:	Store and ship at room temperature, ship as quickly as possible.
Continued Next Page>	

Specimen Rejection Criteria:	The following rejection criteria are designed to prevent the reporting of inaccurate results and to avoid misleading information that might lead to misdiagnosis and inappropriate therapy. A request for a new specimen will provide appropriate materials and clinically relevant information to support good patient care. ▪ Unlabeled or improperly labeled specimen ▪ Non-sterile or leaking container ▪ Inappropriate specimen transport conditions ▪ Illegible, or no submitter information on the request form ▪ Mismatched form and specimen ▪ Broken specimen/sample container ▪ The wrong specimen for test request ▪ Inappropriate outfit for requested test ▪ Illegible or no patient information on the specimen ▪ Expired transport media ▪ Specimen received after prolonged delay (usually more than 72 hours)
Availability:	Monday through Friday
Results and Interpretation:	Group B Strep isolated and identified
Reference Range:	No Group B Strep detected
Additional Information:	Prenatal screening for Group B Strep at 35-37 weeks gestation. If patient is allergic to penicillin, add note to this effect and request antimicrobial susceptibility testing to clindamycin and erythromycin. *Gardnerella vaginalis* isolation done on request for routine genital cultures.
Purpose of Test:	Detect the presence of Group B Strep
Method:	Culture
Interfering Substances:	N/A
Testing Site:	MD Department of Health Laboratories Administration, Central Laboratory 1770 Ashland Avenue, Baltimore, Maryland 21205
Comment:	N/A

TEST:	**Group B Streptococcus (ABCs (previously BIDS))**
Synonym:	Active Bacterial Core Surveillance (ABCs) (Bacterial Invasive Disease Surveillance) Group B Streptococcus: Refer to instructions for **ABCs (previously BIDS)**.
Lab/Phone:	Microbiology 443-681-3952

TEST:	***Haemophilus ducreyi* Culture**
Synonym:	Chancroid Culture; *Haemophilus ducreyi* culture
Laboratory/Phone:	Microbiology 443-681-3952
Turnaround Time:	Seven (7) days [from specimen receipt in the Laboratory]:
Specimen Required:	Ulcer scrapings
Specimen Identification:	Specimen should be labeled with patient's last and first name, patient's address, DOB, specimen type/source, and the date and time of collection. The specimen/sample must be properly labeled and match the test requisition or electronic test order.
Specimen Volume (Optimum):	N/A
Specimen Volume (Minimum):	N/A
Collect:	Collect prior to antimicrobial treatment. Clean the surface of the lesion with 0.85% NaCl. If there is a crust on the lesion remove it. Moisten swab with saline and collect specimen by vigorously rubbing the base of the lesion, put the swab in Amies transport medium or scrape the base of the ulcer with a sterile scalpel blade, irrigate with sterile saline. Then rub the base vigorously with a sterile swab and put it in Amies transport medium or aspirate fluid with a flamed smoothed Pasteur pipette or needle and syringe, put it in sterile container. For abscess disinfect skin with alcohol and iodine. Aspirate fluid with a needle and syringe and put it in a sterile container. NOTE: Intact bubo aspirates are rarely positive for the organisms unless they have ruptured.
Continued Next Page>	

Form:	MDH Form #4676 Infectious Agents: Culture/Detection (Order Forms: 443-681-3777 or form may be downloaded from MDH Laboratory website). **Indicate specimen type using the "Specimen Code" on form.**
Packaging and Shipping*:	Specimens must be packaged in a triple packaging system to ensure that under normal conditions of transport they cannot break, be punctured or leak their contents (Refer to pages 9 & 10 for triple packing guidance). ***Refer to current Federal regulations for specific shipping requirements.**
Transport Conditions:	After collection, place specimen immediately on ice or in the refrigerator and transport on ice to the laboratory.
Specimen Rejection Criteria:	The following rejection criteria are designed to prevent the reporting of inaccurate results and to avoid misleading information that might lead to misdiagnosis and inappropriate therapy. A request for a new specimen will provide appropriate materials and clinically relevant information to support good patient care. ▪ Unlabeled or improperly labeled specimen ▪ Non-sterile or leaking container ▪ Inappropriate specimen transport conditions ▪ Illegible, or no submitter information on the request form ▪ Mismatched form and specimen ▪ Broken specimen/sample container ▪ The wrong specimen for test request ▪ Inappropriate outfit for requested test ▪ Illegible or no patient information on the specimen ▪ Expired transport media
Availability:	Monday through Friday
Results and Interpretation:	Positive Culture: *Haemophilus ducreyi* present. A positive culture indicates infection in a patient with an ulcerative lesion. Mixed infections with other agents known to cause ulcerative sexually transmitted diseases are not uncommon. The presence of *Haemophilus ducreyi* does not rule out these other infections which should be considered in the evaluation of the patient.
Reference Range:	*Haemophilus ducreyi* not found
Additional Information:	False-Negative cultures can result from prior antimicrobial therapy, strain growth variability, and sample and transport techniques
Purpose of Test:	Diagnosis of chancroids
Method:	Culture
Interfering Substances:	Prior antimicrobial therapy
Testing Site:	MD Department of Health Laboratories Administration, Central Laboratory 1770 Ashland Avenue, Baltimore, Maryland 21205
Comment:	N/A

TEST:	***Haemophilus influenzae* (ABCs (previously BIDS))**
Synonym:	Active Bacterial Core Surveillance (ABCs) (Bacterial Invasive Disease Surveillance) *Haemophilus influenzae*: Refer to instructions for **ABCs (previously BIDS)**.
Laboratory/Phone:	Microbiology 443-681-3952

TEST:	**Hantavirus serology (CDC Referral)**
Synonym:	Hanta, HPS, HFRS, Hantaan
Laboratory/Phone:	443-681-3938/3931
Turnaround Time:	10 business days (CDC Referral)
Specimen Required:	Serum
Specimen identification:	The specimen/sample must be properly labeled and include patient's name or unique patient/sample identifier matching the test requisition or electronic test order.
Specimen Volume (Optimum):	2 ml. (Whole Blood)
Specimen Volume (Minimum):	1 ml. (Whole Blood)
Collect:	Red-top vacutainer
Form:	MDH Form #4677 Serological Testing (Order Forms: 443-681-3777 or form may be downloaded from MDH Laboratory website). **Indicate specimen type using the "Specimen Code" on form.**

Continued Next Page>

Packaging and Shipping*:	Specimens must be packaged in a triple packaging system to ensure that under normal conditions of transport they cannot break, be punctured or leak their contents (Refer to pages 9 & 10 for triple packing guidance). ***Refer to current Federal regulations for specific shipping requirements.**
Transport Conditions:	Ambient temperature for specimens on the blood clot (whole blood specimens transported on ice packs are acceptable), separated serum at 2-8°C (refrigerated) or -20°C (frozen).
Specimen Rejection Criteria:	Hemolysis; insufficient volume
Availability:	Monday through Friday
Results and Interpretation:	Given on CDC report
Additional Information:	http://www.cdc.gov/hantavirus/index.html
Purpose of Test:	Detect IgG & IgM antibody to the SNV
Method:	ELISA
Interfering Substances:	None
Processing Site for CDC referral:	MD Department of Health Laboratories Administration, Central Laboratory 1770 Ashland Avenue, Baltimore, Maryland 21205
Comment:	**Contact the MD Department of Health Epidemiologist at (410)767-6700 for prior approval of specimen submission. Required supplemental information: Exposure and travel history, include other relevant risk factors; clinical symptoms, treatment and relevant lab results. Required supplemental form at:** http://www.cdc.gov/ncezid/dhcpp/vspb/pdf/specimen-submission.pdf

TEST:	**Helminths**
Synonym:	Helminths are worm-like parasites that include the flukes (Trematodes); tapeworms (Cestodes); and roundworms (Nematodes): Refer to instructions for **Ova and Parasites Microscopic Examination**.
Lab/Phone:	Microbiology 443-681-3952

TEST:	**Hepatitis A IgM Antibody (Hepatitis A Screen)**
Synonym:	Hepatitis A IgM Antibody, HAV IgM, HAVAB-M.
Laboratory/Phone:	Vaccine Preventable Disease/443-681-3889
Turnaround Time:	2-5 business days
Specimen Required:	Serum; plasma
Specimen identification:	The specimen/sample must be properly labeled and include patient's name or unique patient/sample identifier matching the test requisition or electronic test order.
Specimen Volume (Optimum):	5 ml. Whole blood or 4 mL Serum
Specimen Volume (Minimum):	3 ml. Whole blood or 2 mL Serum
Collect:	Serum - Red-top vacutainer or Serum Separator ("Tiger" or gold top) vacutainer Plasma - Lavender-top (EDTA) vacutainer
Form:	MDH Form #4677 Serological Testing (Order Forms: 443-681-3777 or form may be downloaded from MDH Laboratory website). **Indicate specimen type using the "Specimen Code" on form next to Hepatitis A Screen.**
Packaging and Shipping*:	Specimens must be packaged in a triple packaging system to ensure that under normal conditions of transport they cannot break, be punctured or leak their contents (Refer to pages 9 & 10 for triple packing guidance). ***Refer to current Federal regulations for specific shipping requirements.**
Transport Conditions:	Ambient temperature for specimens on the blood clot (whole blood specimens transported on ice packs are acceptable), separated serum at 2-8°C (refrigerated) or -20°C (frozen). Refrigerated specimen must be tested within 7 days of collection.
Specimen Rejection Criteria:	Discrepancy between name on tube and name on form, unlabeled specimen, insufficient volume, hemolysis, gross bacterial contamination. Specimens collected > 7 days prior to arrival without being frozen.
Availability:	Monday to Friday. **MUST call laboratory for prior approval.**

Continued Next Page>

Results and Interpretation:	Assay results should be interpreted only in the context of other clinical laboratory findings and the total clinical status of the individual. It has been shown that a viremic window exists with individuals infected with HAV, where the individual may be symptomatic for hepatitis but IgM anti-HAV nonreactive. **Negative**: IgM anti-HAV not detected. Does not exclude the possibility of exposure to or infection with HAV. Levels of IgM anti-HAV may be below the cut-off in early infection. **Equivocal/Grayzone**: HAV IgM antibody may or may not be present. Patients exhibiting grayzone test results should be closely monitored by redrawing and retesting approximately one week intervals. Monitoring the level of IgM anti-HAV by redrawing and retesting at approximately one week intervals will distinguish rapidly rising IgM anti-HAV levels associated with early acute hepatitis A infection from gradually decreasing or unchanging IgM anti-HAV levels often associated with late acute stage of HAV infection. **Positive**: HAV IgM antibody detected. Presumptive evidence of HAV infection. A reactive IgM anti-HAV result does not rule out other hepatitis infections.
Additional Information:	For more information, see the CDC link at: http://www.cdc.gov/hepatitis/index.htm
Purpose of Test:	HAVAB-M assay is for the qualitative detection of IgM antibody to hepatitis A virus (IgM anti-HAV) in human serum or plasma. IgM anti-HAV is indicated for testing of specimens from individuals who have signs and symptoms consistent with acute hepatitis. Test results are used in conjunction with other laboratory results and clinical information as an aid in the diagnosis of acute or recent hepatitis A viral infection. During the acute phase of HAV infection, IgM anti-HAV appears in the patient's serum and is nearly always detectable at the onset of symptoms. In most cases, IgM anti-HAV response peaks within the first month of illness and can persist for up to six months. It is not intended for use in screening blood, plasma, or tissue donors.
Method:	Chemiluminescent microparticle immunoassay (CMIA)
Interfering Substances:	Human anti-mouse antibodies (HAMA), found in patients who have received mouse monoclonal antibody treatments. Heterophilic antibodies in human serum, often found in patients routinely exposed to animals or animal serum products. Specimen with anti-E. coli, anti-CMV, or from hemodialysis patients. Heterophilic antibodies in human serum, often found in patients routinely exposed to animals or animal serum products. Specimen from individuals with Non-Hodgkin's Lymphoma may cross-react with this assay.
Testing Site:	MDH Laboratories Administration, Central Laboratory 1770 Ashland Avenue, Baltimore, Maryland 21205
Comment:	May not detect a recent infection, or infection in a person with severely compromised immune system. A reactive IgM anti-HAV result should be used and interpreted only in the context of the overall clinical picture. A negative test result does not exclude the possibility of exposure to hepatitis A virus. Levels of IgM anti-HAV may be below the cut-off in early infection and late acute infection.

TEST:	**Hepatitis A IgG Antibody.**
Synonym:	HAV IgG, HAVAB-G
Laboratory/Phone:	Vaccine Preventable Disease/443-681-3889
Turnaround Time:	2-5 business days
Specimen Required:	Serum
Specimen identification:	The specimen/sample must be properly labeled and include patient's name or unique patient/sample identifier matching the test requisition or electronic test order.
Specimen Volume (Optimum):	5 ml. Whole blood or 4 mL Serum
Specimen Volume (Minimum):	3 ml. Whole blood or 2 mL Serum
Collect:	Red-top vacutainer or Serum Separator ("Tiger" or gold top) vacutainer
Form:	MDH Form #4677 Serological Testing (Order Forms: 443-681-3777 or form may be downloaded from MDH Laboratory website). **Write "Hepatitis A IgG" on form. Indicate specimen type using the "Specimen Code".**
Packaging and Shipping*:	Specimens must be packaged in a triple packaging system to ensure that under normal conditions of transport they cannot break, be punctured or leak their contents (Refer to pages 9 & 10 for triple packing guidance). ***Refer to current Federal regulations for specific shipping requirements.**
Continued Next Page>	

Transport Conditions:	Ambient temperature for specimens on the blood clot (whole blood specimens transported on ice packs are acceptable), separated serum at 2-8°C (refrigerated) or -20°C (frozen). Refrigerated specimen must be tested within 7 days of collection.
Specimen Rejection Criteria:	Discrepancy between name on tube and name on form, unlabeled specimen, insufficient volume, hemolysis, gross bacterial contamination. Specimens collected > 7 days prior to arrival without being frozen.
Availability:	Service available only to state and local health departments Monday to Friday.
Results and Interpretation:	**Negative:** No detectable IgG antibody to hepatitis A virus. **Positive:** Presence of detectable IgG antibody to HAV. It indicates past HAV infection or immunity by HAV vaccination.
Additional Information:	For more information, see the CDC link at: http://www.cdc.gov/hepatitis/index.htm
Purpose of Test:	HAVAB-G assay is for the qualitative detection of IgG antibody to hepatitis A virus (IgG anti-HAV) in human serum. Positive results suggest immunity to HAV infections.
Method:	Chemiluminescent microparticle immunoassay (CMIA)
Interfering Substances:	Human anti-mouse antibodies (HAMA), found in patients who have received mouse monoclonal antibody treatments. Heterophilic antibodies in human serum, often found in patients routinely exposed to animals or animal serum products. Specimen with anti-E. coli, anti-CMV, or from hemodialysis patients. Heterophilic antibodies in human serum, often found in patients routinely exposed to animals or animal serum products.
Testing Site:	MDH Laboratories Administration, Central Laboratory 1770 Ashland Avenue, Baltimore, Maryland 21205
Comment:	May not detect a recent infection, or infection in a person with severely compromised immune system. If HAVAB-G results are inconsistent with clinical evidence, additional testing is suggested to confirm the results. Specimens containing low antibody concentrations (near the cutoff) assayed after a freeze/thaw may exhibit elevated values that may be false positives.

TEST:	**Hepatitis B Core Antibody IgM (Hepatitis B surface antigen Positive reflex test)**
Synonym:	HBc IgM Ab; anti-HBc IgM, CORE-M
Laboratory/Phone:	Vaccine Preventable Disease/443-681-3889
Turnaround Time:	2-5 business days
Specimen Required:	Serum; plasma
Specimen identification:	The specimen/sample must be properly labeled and include patient's name or unique patient/sample identifier matching the test requisition or electronic test order.
Specimen Volume (Optimum):	5 ml. (Whole blood) or 4 ml. (Serum or Plasma)
Specimen Volume (Minimum):	3 ml. (Whole blood) or 2 ml. (Serum or Plasma)
Collect:	Serum - Red-top vacutainer or Serum Separator ("Tiger" or gold top) vacutainer Plasma - Lavender-top (EDTA) vacutainer
Form:	**Test cannot be requested on MDH form # 4677, it is a reflex test for HBsAg positive specimens. Call the lab to request Core IgM testing.**
Packaging and Shipping*:	Specimens must be packaged in a triple packaging system to ensure that under normal conditions of transport they cannot break, be punctured or leak their contents (Refer to pages 9 & 10 for triple packing guidance). ***Refer to current Federal regulations for specific shipping requirements.**
Transport Conditions:	Ambient temperature for specimens on the blood clot (whole blood specimens transported on ice packs are acceptable), separated serum at 2-8°C (refrigerated) or -20°C (frozen). Refrigerated specimen must be tested within 7 days of collection.
Specimen Rejection Criteria:	Discrepancy between name on tube and name on form, unlabeled specimen, insufficient volume, hemolysis, gross bacterial contamination. Specimens collected > 7 days prior to arrival without being frozen.
Availability:	Monday through Friday.
Continued Next Page>	

Results and Interpretation:	**Negative:** IgM anti-HBc not detected. Does not exclude the possibility of exposure to or infection with HBV. **Equivocal/Gray zone:** IgM anti-HBc may or may not be present. Patients with specimens exhibiting gray zone test results should be retested at approximately one-week intervals. Monitoring the level of IgM anti-HBc by retesting at approximately one week intervals will distinguish rapidly rising IgM anti-HBc levels associated with early acute hepatitis B infection from gradually decreasing or unchanging IgM anti-HBc levels often associated with late acute stage of HBV infection, six to nine months from the appearance of HBsAg. **Positive:** Presumptive evidence of IgM anti-HBc antibodies.
Additional Information:	For more information, see the CDC link at: http://www.cdc.gov/hepatitis/index.htm
Purpose of Test:	The CORE-M assay is for the qualitative detection of IgM antibody to hepatitis B core antigen in human serum or plasma. A test for IgM anti-HBc is indicated as an aid in the diagnosis of acute or recent hepatitis B virus (HBV) infection in conjunction with other laboratory results and clinical information. It is not intended for use in screening blood, plasma, or tissue donors.
Method:	Chemiluminescent microparticle immunoassay (CMIA)
Interfering Substances:	High levels of IgM (e.g. patients with multiple myeloma). Human anti-mouse antibodies (HAMA), found in patients who have received mouse monoclonal antibody treatments. Heterophilic antibodies in human serum, often found in patients routinely exposed to animals or animal serum products.
Testing Site:	MDH Laboratories Administration, Central Laboratory 1770 Ashland Avenue, Baltimore, Maryland 21205
Comment:	May not detect a very recent infection, or infection in a person with severely compromised immune system. Current methods for the detection of IgM anti-HBc may not detect all infected individuals. A non-reactive test result does not exclude the possibility of exposure to or infection with HBV. CORE-M assay is limited to the detection of IgM anti-HBc in human serum or plasma. It can be used to determine whether a patient has, or has recently had, acute or subclinical hepatitis B infection. Supportive clinical information, including other hepatitis B markers, should also be evaluated. The test cannot determine a patient's immune status to hepatitis B.

TEST:	**Hepatitis B Core Antibody Total**
Synonym:	CORE, anti-HBc IgG/IgM
Laboratory/Phone:	Vaccine Preventable Disease/443-681-3889
Turnaround Time:	2-5 business days
Specimen Required:	Serum; plasma
Specimen identification:	The specimen/sample must be properly labeled and include patient's name or unique patient/sample identifier matching the test requisition or electronic test order.
Specimen Volume (Optimum):	5 ml. (Whole blood) or 4 ml. (Serum or Plasma)
Specimen Volume (Minimum):	3 ml. (Whole blood) or 2 ml. (Serum or Plasma)
Collect:	Serum - Red-top vacutainer or Serum Separator ("Tiger" or gold top) vacutainer Plasma - Lavender-top (EDTA) vacutainer
Form:	MDH Form #4677 Serological Testing (Order Forms: 443-681-3777 or form may be downloaded from MDH Laboratory website). **Write "Hepatitis B Core" on form. Indicate specimen type using the "Specimen Code".**
Packaging and Shipping*:	Specimens must be packaged in a triple packaging system to ensure that under normal conditions of transport they cannot break, be punctured or leak their contents (Refer to pages 9 & 10 for triple packing guidance). ***Refer to current Federal regulations for specific shipping requirements.**
Transport Conditions:	Ambient temperature for specimens on the blood clot (whole blood specimens transported on ice packs are acceptable), separated serum at 2-8°C (refrigerated) or -20°C (frozen). Refrigerated specimen must be tested within 7 days of collection. **Specimens must NOT be frozen, freezing produces erroneous results in this assay.**
Specimen Rejection Criteria:	Discrepancy between name on tube and name on form, unlabeled specimen; hemolytic; gross bacterial contamination, and previously frozen specimens. Specimens collected > 7 days prior to testing.
Availability:	Monday through Friday.
Continued Next Page>	

Results and Interpretation:	**Negative:** Hepatitis B core antibodies not detected. **Positive:** Hepatitis B core antibodies were detected. The presence of anti-HBc antibodies does not differentiate between acute or chronic hepatitis B infections.
Additional Information:	For more information, see the CDC link at: http://www.cdc.gov/hepatitis/index.htm
Purpose of Test:	The CORE assay is for the qualitative detection of antibodies to hepatitis B core antigen in human serum or plasma. It is intended as an aid in the diagnosis of acute, chronic, or resolved hepatitis B virus (HBV) infection in conjunction with other laboratory results and clinical information. It is not intended for use in screening blood, plasma, or tissue donors.
Method:	Chemiluminescent microparticle immunoassay (CMIA)
Interfering Substances:	Human anti-mouse antibodies (HAMA), found in patients who have received mouse monoclonal antibody treatments. Heterophilic antibodies in human serum, often found in patients routinely exposed to animals or animal serum products.
Testing Site:	MDH Laboratories Administration, Central Laboratory 1770 Ashland Avenue, Baltimore, Maryland 21205
Comment:	May not detect a recent infection, or infection in a person with severely compromised immune system. A nonreactive test result does not exclude the possibility of exposure to or infection with HBV.

TEST:	**Hepatitis B Surface Antibody (Hepatitis B Panel, Hepatitis B post vaccine)**
Synonym:	HBsAb, anti-HBs, AUSAB.
Laboratory/Phone:	Vaccine Preventable Disease/443-681-3889
Turnaround Time:	2-5 business days
Specimen Required:	Serum; plasma
Specimen identification:	The specimen/sample must be properly labeled and include patient's name or unique patient/sample identifier matching the test requisition or electronic test order.
Specimen Volume (Optimum):	5 ml. (Whole blood) or 4 ml. (Serum or Plasma)
Specimen Volume (Minimum):	3 ml. (Whole blood) or 2 ml. (Serum or Plasma)
Collect:	Serum - Red-top vacutainer or Serum Separator ("Tiger" or gold top) vacutainer Plasma - Lavender-top (EDTA) vacutainer
Form:	MDH Form #4677 Serological Testing (Order Forms: 443-681-3777 or form may be downloaded from MDH Laboratory website). **Indicate specimen type using the "Specimen Code" on form next to Hepatitis B post vaccine (HBsAb) or Hepatitis B Panel (HBsAg, HBsAb).**
Packaging and Shipping*:	Specimens must be packaged in a triple packaging system to ensure that under normal conditions of transport they cannot break, be punctured or leak their contents (Refer to pages 9 & 10 for triple packing guidance). ***Refer to current Federal regulations for specific shipping requirements.**
Transport Conditions:	Ambient temperature for specimens on the blood clot (whole blood specimens transported on ice packs are acceptable), separated serum at 2-8°C (refrigerated) or -20°C (frozen). Refrigerated specimen must be tested within 7 days of collection.
Specimen Rejection Criteria:	Discrepancy between name on tube and name on form, unlabeled specimen; hemolytic; gross bacterial contamination. Specimens collected > 7 days prior to submission
Availability:	Monday through Friday.
Results and Interpretation:	**Negative**: < 8.00 mIU/mL. Individual is considered not immune to HBV infection. **Equivocal/Grayzone**: ≥ 8.00 mIU/mL to < 12.00 mIU/mL. The immune status of the individual should be further assessed by considering other factors, such as clinical status, follow-up testing, associated risk factors, and the use of additional diagnostic information. **Positive**: ≥12.00 mIU/mL. Individual is considered immune to HBV infection.
Reference Range	Patient's with a titer ≥12.00 mIU/mL is considered immune to Hepatitis B Virus infection.
Additional Information:	For more information, see the CDC link at: http://www.cdc.gov/hepatitis/index.htm
Purpose of Test:	AUSAB assay is for the quantitative determination of antibody to hepatitis B surface antigen in human serum or plasma. It is intended for measurement of antibody response following hepatitis B virus (HBV) vaccination, determination of HBV immune status, and for the laboratory diagnosis of HBV disease associated with HBV test results and clinical information. It is not intended for use in screening blood, plasma, or tissue donors

Continued Next Page>

Method:	Chemiluminescent microparticle immunoassay (CMIA)
Interfering Substances:	Fibrin, often from patients receiving anticoagulant or thrombolytic therapy.
Testing Site:	MDH Laboratories Administration, Central Laboratory 1770 Ashland Avenue, Baltimore, Maryland 21205
Comment:	May not detect a recent infection, or infection in a person with severely compromised immune system. For diagnostic purposes, results should be used in conjunction with patient history and other hepatitis markers for diagnosis of acute and chronic infection. A non-reactive test result does not exclude the possibility of exposure to hepatitis B virus. Results obtained with the AUSAB assay may not be used interchangeably with values obtained with different manufacturers' assay methods. Assay does not differentiate between vaccination and natural infection. Performance characteristics have not been established for therapeutic monitoring. A reactive anti-HBs result does not exclude coinfection by another hepatitis virus.

TEST:	**Hepatitis B Surface Antigen (Hepatitis B Panel; Hepatitis B Screen)**
Synonym:	HBsAg, Hepatitis B surface Antigen Qualitative; HBsAg Qual.
Laboratory/Phone:	Vaccine Preventable Disease/443-681-3889
Turnaround Time:	2-5 business days
Specimen Required:	Serum; plasma
Specimen identification:	The specimen/sample must be properly labeled and include patient's name or unique patient/sample identifier matching the test requisition or electronic test order.
Specimen Volume (Optimum):	5 ml. (Whole blood) or 4 ml. (Serum or Plasma)
Specimen Volume (Minimum):	3 ml. (Whole blood) or 2 ml. (Serum or Plasma)
Collect:	Serum - Red-top vacutainer or Serum Separator ("Tiger" or gold top) vacutainer Plasma - Lavender-top (EDTA) vacutainer
Form:	MDH Form #4677 Serological Testing (Order Forms: 443-681-3777 or form may be downloaded from MDH Laboratory website). **Indicate specimen type using the "Specimen Code" on form next to Hepatitis B Screen (HBsAg) or Hepatitis B Panel (HBsAg, HBsAb).**
Packaging and Shipping*:	Specimens must be packaged in a triple packaging system to ensure that under normal conditions of transport they cannot break, be punctured or leak their contents (Refer to pages 9 & 10 for triple packing guidance). ***Refer to current Federal regulations for specific shipping requirements.**
Transport Conditions:	Ambient temperature for specimens on the blood clot (whole blood specimens transported on ice packs are acceptable), separated serum at 2-8°C (refrigerated) or -20°C (frozen). Refrigerated specimen must be tested within 7 days of collection.
Specimen Rejection Criteria:	Discrepancy between name on tube and name on form, unlabeled specimen; hemolytic; gross bacterial contamination. Specimens collected > 7 days prior to submission
Availability:	Monday through Friday.
Results and Interpretation:	**Negative:** HBsAg not detected**.** **Positive:** Presumptive evidence of HBsAg.
Additional Information:	For more information, see the CDC link at: http://www.cdc.gov/hepatitis/index.htm
Purpose of Test:	HBsAg Qualitative assay is for the qualitative detection of hepatitis B surface antigen in human serum or plasma. The assay may also be used to screen for HBV infection in pregnant women to identify neonates who are at risk for acquiring hepatitis B during the perinatal period. Assay results in conjunction with other laboratory results and clinical information, may be used to provide presumptive evidence of infection with HBV (state of infection or associated disease not determined) in persons with signs and symptoms of hepatitis and in persons at risk for hepatitis B infection. Not intended for use in screening blood, plasma, or tissue donors.
Method:	Chemiluminescent microparticle immunoassay (CMIA)
Interfering Substances:	Human anti-mouse antibodies (HAMA), found in patients who have received mouse monoclonal antibody treatments. Heterophilic antibodies in human serum, often found in patients routinely exposed to animals or animal serum products.
Testing Site:	MDH Laboratories Administration, Central Laboratory 1770 Ashland Avenue, Baltimore, Maryland 21205

Continued Next Page>

Comment:	May not detect a recent infection, or infection in a person with severely compromised immune system. Assay performance characteristics have not been established when the HBsAg Qualitative assay is used in conjunction with other manufacturers' assays for specific HBV markers. Current methods for the detection of hepatitis B surface antigen may not detect all potentially infected individuals. A nonreactive test result does not exclude the possibility of exposure to or infection with hepatitis B virus. A nonreactive test result in individuals with prior exposure to hepatitis B may be due to antigen levels below the detection limit of this assay or lack of antigen reactivity to the antibodies in this assay. If the HBsAg Qualitative results are inconsistent with clinical evidence, additional testing is suggested to confirm the result for diagnostic purposes. Results should be used in conjunction with patient history and other hepatitis markers for diagnosis of acute and chronic infection. A reactive HBsAg result does not exclude co-infection by another hepatitis virus.

TEST:	**Hepatitis B Surface Antigen Confirmation (HBsAg Positive Reflex Test)**
Synonym:	HBsAg Qualitative Confirmatory; HBsAg Qualitative Neutralization assay
Laboratory/Phone:	Vaccine Preventable Disease/443-681-3889
Turnaround Time:	2-5 business days
Specimen Required:	Serum; plasma
Specimen identification:	The specimen/sample must be properly labeled and include patient's name or unique patient/sample identifier matching the test requisition or electronic test order.
Specimen Volume (Optimum):	5 ml. (Whole blood) or 4 ml. (Serum or Plasma)
Specimen Volume (Minimum):	3 ml. (Whole blood) or 2 ml. (Serum or Plasma)
Collect:	Serum - Red-top vacutainer or Serum Separator ("Tiger" or gold top) vacutainer Plasma - Lavender-top (EDTA) vacutainer
Form:	**Test cannot be requested, it is a reflex test for HBsAg positive specimens.**
Packaging and Shipping*:	Specimens must be packaged in a triple packaging system to ensure that under normal conditions of transport they cannot break, be punctured or leak their contents (Refer to pages 9 & 10 for triple packing guidance). ***Refer to current Federal regulations for specific shipping requirements.**
Transport Conditions:	Ambient temperature for specimens on the blood clot (whole blood specimens transported on ice packs are acceptable), separated serum at 2-8°C (refrigerated) or -20°C (frozen). Refrigerated specimen must be tested within 7 days of collection.
Specimen Rejection Criteria:	Discrepancy between name on tube and name on form, unlabeled specimen; hemolytic; gross bacterial contamination. Specimens collected > 7 days prior to submission
Availability:	Monday through Friday.
Results and Interpretation:	**Confirmed:** Presence of HBs Antigen confirmed. Confirmed result may indicate acute or chronic HBV infection, depending on presence of other HBV serological markers. **Not Confirmed**: The presence of HBsAg cannot be confirmed via neutralization. The repeatedly reactive result obtained with the HBsAg Qualitative assay may be the result of a nonspecific reaction (false positive). As the presence of nonspecific binding may obscure low levels of HBsAg in the specimen due to early infection or early recovery, it is recommended that the patient be evaluated for other serologic markers of HBV infection (i.e., total anti-HBc or IgM antiHBc) and that the patient be retested for HBsAg in 4 to 6 weeks.
Additional Information:	For more information, see the CDC link at: http://www.cdc.gov/hepatitis/index.htm
Purpose of Test:	The HBsAg Qualitative confirmation assay is for the qualitative confirmation of the presence of hepatitis B surface antigen (HBsAg) in human serum or plasma by specific antibody neutralization. Assay results, in conjunction with other laboratory results and clinical information, may be used to provide presumptive evidence of infection with HBV (state of infection or associated disease not determined) in persons with signs and symptoms of hepatitis and in persons at risk for hepatitis B infection. It is not intended for use in screening blood, plasma, or tissue donors.
Method:	Chemiluminescent microparticle immunoassay (CMIA)
Interfering Substances:	Human anti-mouse antibodies (HAMA), found in patients who have received mouse monoclonal antibody treatments. Heterophilic antibodies in human serum, often found in patients routinely exposed to animals or animal serum products.
Continued Next Page>	

Testing Site:	MDH Laboratories Administration, Central Laboratory 1770 Ashland Avenue, Baltimore, Maryland 21205
Comment:	May not detect a recent infection, or infection in a person with severely compromised immune system. Assay performance characteristics have not been established when HBsAg Qualitative Confirmatory assay is used in conjunction with other manufacturers' assays for specific HBV serological markers. If HBsAg Qualitative Confirmatory results are Inconsistent with clinical evidence, additional testing is suggested to confirm the result. For diagnostic purposes, results should be used in conjunction with patient history and other hepatitis markers for diagnosis of acute and chronic infection. Although there is an association between the presence of HBsAg infectivity and a reactive result, it is recognized that presently available methods for HBsAg confirmation may not detect all possible cases of HBV infection.

TEST:	**Hepatitis C Antibody (Hepatitis C Screen)**
Synonym:	HCV Ab; anti-HCV; Hepatitis C Screen
Laboratory/Phone:	Vaccine Preventable Disease/443-681-3889
Turnaround Time:	2-5 business days
Specimen Required:	Serum; plasma
Specimen identification:	The specimen/sample must be properly labeled and include patient's name or unique patient/sample identifier matching the test requisition or electronic test order.
Specimen Volume (Optimum):	5 ml. (Whole blood) or 4 ml. (Serum or Plasma)
Specimen Volume (Minimum):	3 ml. (Whole blood) or 2 ml. (Serum or Plasma)
Collect:	Serum - Red-top vacutainer or Serum Separator ("Tiger" or gold top) vacutainer Plasma - Lavender-top (EDTA) vacutainer
Form:	MDH Form #4677 Serological Testing (Order Forms: 443-681-3777 or form may be downloaded from MDH Laboratory website). **Indicate specimen type using the "Specimen Code" on form next to Hepatitis C Screen.**
Packaging and Shipping*:	Specimens must be packaged in a triple packaging system to ensure that under normal conditions of transport they cannot break, be punctured or leak their contents (Refer to pages 9 & 10 for triple packing guidance). ***Refer to current Federal regulations for specific shipping requirements.**
Transport Conditions:	Ambient temperature for specimens on the blood clot (whole blood specimens transported on ice packs are acceptable), separated serum at 2-8°C (refrigerated) or -20°C (frozen). Refrigerated specimen must be tested within 7 days of collection.
Specimen Rejection Criteria:	Discrepancy between name on tube and name on form, unlabeled specimen; hemolytic; gross bacterial contamination. Specimens collected > 7 days prior to submission
Availability:	Monday through Friday.
Results and Interpretation:	**Negative**: Antibodies to HCV not detected; does not exclude the possibility of exposure to HCV. **Equivocal/Grayzone**: Antibodies to HCV may or may not be present; another specimen should be obtained from the individual for further testing or follow CDC recommendations for supplemental testing. Follow up HCV RNA test is pending at the MDH Laboratories. Follow up HCV RNA test is pending at MDH Laboratories **Positive**: Presumptive evidence of antibodies to HCV; follow CDC recommendations for supplemental testing. Follow up HCV RNA test is pending at the MDH Laboratories.
Additional Information:	For more information, see the CDC link at: http://www.cdc.gov/hepatitis/index.htm
Purpose of Test:	Anti-HCV assay is for the qualitative detection of antibody to Hepatitis C Virus in human serum or plasma. Assay results, in conjunction with other laboratory results and clinical information, may be used to provide presumptive evidence of infection with HCV (state of infection or associated disease not determined) in persons with signs and symptoms of hepatitis and in persons at risk for hepatitis C infection. It is not intended for use in screening blood, plasma, or tissue donors
Method:	Chemiluminescent microparticle immunoassay (CMIA)
Interfering Substances:	Human anti-mouse antibodies (HAMA), found in patients who have received mouse monoclonal antibody treatments. Heterophilic antibodies in human serum, often found in patients routinely exposed to animals or animal serum products.

Continued Next Page>

Testing Site:	MDH Laboratories Administration, Central Laboratory 1770 Ashland Avenue, Baltimore, Maryland 21205
Comment:	May not detect a recent infection, or infection in a person with severely compromised immune system. **A specimen positive or equivocal for Hepatitis C Antibody will be further tested for HCV RNA at the MDH Public Health Laboratory if the specimen meets acceptability criteria.** For diagnostic purposes, results should be used in conjunction with patient history and other hepatitis markers for diagnosis of acute and chronic infection. Current methods for the detection of antibodies to HCV may not detect all infected individuals. A nonreactive test result does not exclude the possibility of exposure to HCV. Nonreactive test results in individuals with prior exposure to HCV may be due to antibody levels being below the detection limit of this assay or to lack of antibody reactivity to the recombinant antigens used in this assay. Immunocompromised patients who have HCV may produce levels of antibody below the sensitivity of this assay and may not be detected as positive. The affinity or avidity differences of anti-human IgG/IgM for anti-HCV have not been determined with this assay. Therefore, there may not be a demonstration of a significant increase in antibody level between acute and convalescent specimens for a patient in the late acute stage of infection when IgM antibodies are decreasing. Results obtained with Anti-HCV assay may not be used interchangeably with values obtained with different manufacturers' assay methods. Assay performance characteristics have not been established for newborns, infants, children, or populations of immunocompromised or immunosuppressed patients. A reactive anti-HCV result does not exclude co-infection by another hepatitis virus. The magnitude of an Anti-HCV assay result cannot be correlated to an end point titer.

TEST:	**Hepatitis C Virus (HCV) RNA (Preapproved Submitters or Reflex)**
Synonym:	Hologic's Aptima® Hepatitis C Quant Dx Assay; HCV RNA
Laboratory/Phone:	Vaccine Preventable Diseases Section / 443-681-3889
Turnaround Time:	2-5 business days
Specimen Required:	Plasma or Serum collected in plasma preparation tube (PPT, white or lavender top) or serum separator tube (SST, gold or tiger top)
Specimen identification:	Label specimen with the full name exactly matching form, date/time of collection and centrifugation. The specimen/sample must be properly labeled and match the test requisition or electronic test order.
Specimen Volume (Optimum):	5 ml of blood in plasma preparation tube (PPT) or serum separator tube (SST)
Specimen Volume (Minimum):	3 mL of blood in PPT or SST
Collect:	**Preapproved submitters must call the Outfits Unit (443-681-3777) to order collection kit**. All items required for specimen transport are provided in the specimen collection kit, including instructions. Tubes must be labeled with the patient's name or unique identifier. DO NOT uncap the patient specimen at any time. Aliquoted specimen will be rejected. Specimen must be centrifuged within 6 hours of collection. Collection and centrifugation date/time must be recorded on Serological Testing form. **Failure to centrifuge will result in sample rejection.**
Form:	MDH Form #4677 Serological Testing (Order Forms: 443-681-3777 or form may be downloaded from MDH Laboratory website). **Indicate specimen type "P" for plasma next to the CDC/Other Tests box and write "HCV RNA". Record the date/time of collection and centrifugation.**

Continued Next Page>

Packaging and Shipping*:	Follow submission guidelines, provided with each HCV RNA kit. Specimens must be packaged in a triple packaging system to ensure that under normal conditions of transport they cannot break, be punctured or leak their contents (Refer to pages 9 & 10 for triple packing guidance). ***Refer to current Federal regulations for specific shipping requirements.**
Transport Conditions:	Each specimen must be clearly labeled, individually packaged in a leak-proof biobag, and accompanied with a completed MDH form #4677. Specimen in biobags should be placed in a cooler marked "HCV ONLY" with an ice pack. Send specimen to MDH Laboratories Administration, 1770 Ashland Avenue, Baltimore, MD via lab courier Monday-Thursday whenever possible, to avoid weekend deliveries.
Specimen Rejection Criteria:	Too old, patient ID on specimen is missing, illegible or does not match lab slip, quantity not sufficient, expired collection tubes, improper transport temperature, broken or leaked in transit, improper collection tube type, specimen not centrifuged within 6 hours of collection, missing or incomplete lab slip (collection and centrifugation date and time, patient identifiers, submitter information).
Availability:	Monday-Friday
Results and Interpretation:	Qualitative results reported as follows: **HCV RNA Not Detected:** No Current HCV Infection Follow-up testing is recommended as per national HCV guidelines for viral load assessment, and no further testing is recommended for diagnosis of HCV. As per the CDC HCV treatment guidelines, repeat HCV RNA testing is recommended after three months for patients exposed to HCV infection within 6 months or patients with clinical evidence of HCV infection. **HCV RNA Detected:** Follow-up testing is recommended as per national HCV guidelines for viral load assessment, and results must be interpreted within context of all relevant clinical and laboratory findings for diagnosis of HCV. **Invalid:** Error indicated in generation of the result. Specimen should be tested.
Additional Information:	Restricted test (preapproved submitters only, call 443-681-3889)
Purpose of Test:	Qualitative detection of HCV RNA or as reflex
Method:	Transcription-mediated amplification (TMA) and real-time transcription-mediated amplification (RT-TMA) using Hologic Panther® for the Aptima® HCV Quant Dx Assay.
Interfering Substances:	Rare, mutations within the highly conserved regions of the viral genome covered by the primers and/or probes in the Aptima HCV Quant Dx assay may results in failure to detect the virus.
Testing Site:	MDH Laboratories Administration, Central Laboratory 1770 Ashland Avenue, Baltimore, Maryland 21205
Comment:	Invalid result due to out of range value. Specimen should be resubmitted.

TEST:	**Herpes Simplex Virus (HSV Types 1 & 2) Virus Culture**
Synonym:	Herpes Simplex Virus (HSV Types 1 & 2): Refer to instructions for **Virus Culture**.
Laboratory/Phone:	Virology: 443-681-3934

TEST:	**Herpes Simplex Virus Serology**
Synonym:	Herpes simplex virus (HSV) type 1 & 2 IgG serology
Laboratory/Phone:	443-681-3938/3931
Turnaround Time:	5 business days
Specimen Required:	Serum
Specimen identification:	The specimen/sample must be properly labeled and include patient's name or unique patient/sample identifier matching the test requisition or electronic test order.
Specimen Volume (Optimum):	2 ml. (Whole Blood)
Specimen Volume (Minimum):	1 ml. (Whole Blood)
Collect:	Red-top vacutainer
Form:	MDH Form #4677 Serological Testing (Order Forms: 443-681-3777 or form may be downloaded from MDH Laboratory website). **Indicate specimen type using the "Specimen Code" on form.** Date specimen collected **MUST** be provided.

Continued Next Page>

Packaging and Shipping*:	Specimens must be packaged in a triple packaging system to ensure that under normal conditions of transport they cannot break, be punctured or leak their contents (Refer to pages 9 & 10 for triple packing guidance). ***Refer to current Federal regulations for specific shipping requirements.**
Transport Conditions:	Ambient temperature for specimens on the blood clot (whole blood specimens transported on ice packs are acceptable), separated serum at 2-8°C (refrigerated) or -20°C (frozen). Specimens must be tested within 7 days of collection. If shipping is delayed beyond 7 days, serum must be frozen at -20°C and shipped on dry ice.
Specimen Rejection Criteria:	Grossly hemolyzed or lipemic specimens, unlabeled specimen, leaking container, insufficient volume, mismatch between labeling of specimen and test request form, specimen collected > 7 days prior to arrival without being frozen.
Availability:	Monday through Friday
Results and Interpretation:	**POSITIVE**—Presumptive evidence of IgG antibodies to HSV-1/HSV-2 **NEGATIVE**—No IgG antibodies to HSV-1/HSV-2 detected **EQUIVOCAL**—Immunological status cannot be determined, please re-draw patient in 4-12 weeks.
Additional Information:	The performance of this assay has not been established for use in a pediatric population or for neonatal screening.
Purpose of Test:	Detect IgG antibodies to HSV I and HSV II
Method:	CLIA—Chemiluminescent Immunoassay
Interfering Substances:	Hemolysis, lipemia
Testing Site:	MD Department of Health Laboratories Administration, Central Laboratory 1770 Ashland Avenue, Baltimore, Maryland 21205
Comment:	Serologic results should not be used as a sole means for diagnosis, treatment, or for the assessment of a patient's health. Clinical correlation is required.

TEST:	**HIV-1 p24 Antigen and HIV-1/HIV-2 Antibody Combination Assay**
Synonym:	HIV Ag/Ab Combo Assay
Laboratory/Phone:	443-681-3877
Turnaround Time:	3-7 working days
Specimen Required:	Serum from whole blood
Specimen identification:	Label container with patient's name, date of birth, and date of collection. (CTR# if applicable)
Specimen Volume (Optimum):	7 ml (Whole Blood)
Specimen Volume (Minimum):	5 ml (Whole Blood)
Collect:	Red-top vacutainer (Red-Top Serum Separator "Tiger Top" Tube is acceptable)
Form:	MDH 4677 Serological Testing (Order Forms: 443-681-3777) **Indicate specimen type using the "Specimen Code" on form.**
Packaging and Shipping*:	Specimens must be packaged in a triple packaging system to ensure that under normal conditions of transport they cannot break, be punctured or leak their contents (Refer to pages 9 & 10 for triple packing guidance). ***Refer to current Federal regulations for specific shipping requirements.**
Transport Conditions:	2-8°C (cold packs) DO NOT EXCEED STORAGE TIME LIMITATIONS
Specimen Rejection Criteria:	Must comply with proper labeling, storage, and transport requirements.
Availability:	Testing is performed routinely
Results and Interpretation:	**Non-reactive** = HIV-1 p24 antigen and HIV-1/ HIV-2 antibodies not detected **Reactive** = Presumptive evidence of HIV-1 p24 antigen and/or HIV-1/ HIV-2 antibodies; perform confirmatory/ supplemental assays
Reference Range:	Signal to cutoff (S/CO) values $\geq$1.00 are presumptive reactive for HIV-1 p24 antigen or HIV-1/ HIV-2 antibodies.
Additional Information:	Confirmatory assays may be performed to confirm presence of HIV antibody or HIV-1 RNA; Supplemental assay may be performed to differentiate HIV-1 and HIV-2 infections.
Purpose of Test:	Aid in the diagnosis of HIV-1 / HIV-2 infection including primary or acute HIV-1 infection.
Method:	Chemiluminescence microparticle immunoassay (CMIA)
Interfering Substances:	Fibrin, red blood cells, or other particulate matter

Continued Next Page>

Testing Site:	MD Department of Health Laboratories Administration, Central Laboratory 1770 Ashland Avenue, Baltimore, Maryland 21205
Comment:	Store at room temperature no more than 3 days, or 7 days if stored 2-8°C following specimen collection. **Specimen must be received at the laboratory and tested within 7 days after collection.**

TEST:	**Infectious Mononucleosis (IM Serology)**
Synonym:	Heterophile Antibody Assay
Laboratory/Phone:	443-681-3938/3931
Turnaround Time:	5 business days
Specimen Required:	Serum
Specimen identification:	The specimen/sample must be properly labeled and include patient's name or unique patient/sample identifier matching the test requisition or electronic test order
Specimen Volume (Optimum):	2 ml. (Whole Blood)
Specimen Volume (Minimum):	1 ml. (Whole Blood)
Collect:	Red-top vacutainer
Form:	MDH Form #4677 Serological Testing (Order Forms: 443-681-3777 or form may be downloaded from MDH Laboratory website). **Indicate specimen type using the "Specimen Code" on form.** Date specimen collected **MUST** be provided.
Packaging and Shipping*:	Specimens must be packaged in a triple packaging system to ensure that under normal conditions of transport they cannot break, be punctured or leak their contents (Refer to pages 9 & 10 for triple packing guidance). ***Refer to current Federal regulations for specific shipping requirements.**
Transport Conditions:	Ambient temperature for specimens on the blood clot (whole blood specimens transported on ice packs are acceptable), separated serum at 2-8°C (refrigerated) or -20°C (frozen). Specimens must be tested within 3 days of collection. If shipping is delayed beyond 3 days, serum must be frozen at -20°C and shipped on dry ice.
Specimen Rejection Criteria:	Grossly hemolyzed specimens, unlabeled specimen, leaking container, insufficient volume, mismatch between labeling of specimen and test request form, specimen collected > 3 days prior to arrival without being frozen.
Availability:	Monday through Friday
Results and Interpretation:	**POSITIVE:** Infectious Mono heterophile antibody detected **NEGATIVE:** Infectious Mono heterophile antibody not detected
Additional Information:	Further EBV testing can aid in the clinical diagnosis
Purpose of Test:	Detect antibody in patients with infectious mononucleosis
Method:	Slide agglutination
Interfering Substances:	Hemolysis
Testing Site:	MD Department of Health Laboratories Administration, Central Laboratory 1770 Ashland Avenue, Baltimore, Maryland 21205
Comment:	Serologic results should not be used as a sole means for diagnosis, treatment, or for the assessment of a patient's health. Clinical correlation is required.

TEST:	**Influenza Virus (Types A & B) Viral Culture**
Synonym:	Influenza Virus (Types A & B): Refer to instructions for **Virus Culture**.
Laboratory/Phone:	Virology: 443-681-3934

TEST:	**Interferon-Gamma Release Assay (IGRA)**
Synonym:	Refer to Instructions for QuantiFERON Plus
Laboratory/Phone:	(443) 681-3942

TEST:	**Japanese Encephalitis (CDC Referral)** CDC test available based on patient's travel history.
Synonym:	**Ar**thropod-**bo**rne **virus: Japanese Encephalitis (JE)**
Laboratory/Phone:	Virology: 443-681-3936/3931
Turnaround Time:	3 weeks (CDC Referral)
Specimen Required:	Serum (blood)
Specimen identification:	Label container with patient's last name, first name, DOB, specimen type, date and time of collection.
Specimen Volume (Optimum):	2 ml serum
Specimen Volume (Minimum):	1 ml serum
Collect:	Red-top vacutainer tube, transfer serum to sterile tube
Form:	MDH Form #4677 Serological Testing (Order Forms: 443-681-3777 or form may be downloaded from MDH Laboratory website). **Indicate specimen type using the "Specimen Code" on form.** Write "S" for serum in the "Other Tests Request" and indicate Japanese Encephalitis. **For testing to be initiated, the following information MUST be provided: date of onset, date specimen collected, travel history, and flavivirus vaccination history.** Also please provide: patient's date of birth, diagnosis, symptoms, fatality, and whether patient is immunocompromised.
Packaging and Shipping*:	Specimens must be packaged in a triple packaging system to ensure that under normal conditions of transport they cannot break, be punctured or leak their contents (Refer to pages 9 & 10 for triple packing guidance). ***Refer to current Federal regulations for specific shipping requirements.**
Transport Conditions:	Store refrigerated and ship on cold packs in a cooler. If shipping is delayed beyond 48 hours, specimen can be frozen at -20°C and shipped on dry ice.
Specimen Rejection Criteria:	Grossly hemolyzed specimen, unlabeled specimen, leaking container, mismatch between labeling of specimen and test request form/electronic test order, and does not meet epidemiological criteria required for testing (e.g. travel history, etc.)
Availability:	Specimens shipped to the CDC Monday-Wednesday.
Results and Interpretation:	Serum that tests positive for IgM and negative for IgG is consistent with acute Japanese Encephalitis infection. A positive Japanese Encephalitis EIA is confirmed by PRNT (plaque reduction neutralization). A positive IgG antibody and a negative IgM antibody are consistent with infection in the distant past and are not consistent with acute infection.
Additional Information:	The term "Arbovirus" has no taxonomic significance, but is a shortened name given to viruses that are transmitted by blood feeding arthropods (mosquitoes, ticks, etc.). Arboviruses that cause human encephalitis are members of three virus families: The *Togaviridae* (genus *Alphavirus*), *Flaviviridae*, and *Bunyaviridae*. For more information, see the CDC link at: https://www.cdc.gov/ncezid/dvbd/ Patients with travel history supporting suspicion of other arboviruses will be sent to the CDC for testing.
Purpose of Test:	For the presumptive detection of antibodies to Japanese Encephalitis Virus. Confirmatory testing by PRNT may be required.
Method:	EIA (Screening) & PRNT (Plaque Reduction Neutralization Test) referral to the Centers for Disease Control and Prevention (CDC).
Interfering Substances:	
Processing Site for CDC referral:	MD Department of Health Laboratories Administration, Central Laboratory 1770 Ashland Avenue, Baltimore, Maryland 21205
Comment:	Other Arboviral testing not available at the state lab will be forwarded to the CDC based on patient's travel history and onset date.

TEST:	**Legionella Antigen Detection**
Synonym:	Legionella Urinary Antigen
Laboratory/Phone:	443-681-3938/3931
Turnaround Time:	5 business days
Specimen Required:	Urine
Specimen identification:	The specimen/sample must be properly labeled and include patient's name or unique patient/sample identifier matching the test requisition or electronic test order.
Specimen Volume (Optimum):	5 ml Urine (First void preferred)
Specimen Volume (Minimum):	0.5 ml Urine
Continued Next Page>	

Collect:	Sterile container
Form:	MDH Form #4677 Serological Testing (Order Forms: 443-681-3777 or form may be downloaded from MDH Laboratory website). **Indicate specimen type using the "Specimen Code" on form.** Date specimen collected **MUST** be provided.
Packaging and Shipping*:	Specimens must be packaged in a triple packaging system to ensure that under normal conditions of transport they cannot break, be punctured or leak their contents (Refer to pages 9 & 10 for triple packing guidance). ***Refer to current Federal regulations for specific shipping requirements.**
Transport Conditions:	Leak proof containers shipped at 2-8°C (transported on ice packs) or frozen at -20°C shipped on dry ice.
Specimen Rejection Criteria:	Unlabeled specimen, leaking container, insufficient volume, mismatch between labeling of specimen and test request form, and bloody specimens.
Availability:	Monday through Friday
Results and Interpretation:	**POSITIVE–** Presumptive evidence of *L. pneumophila* serogroup 1 antigen in urine, suggesting current or past infection. **NEGATIVE**—No evidence of *L. pneumophila* serogroup 1 antigen in urine suggesting no recent or current infection. Legionnaires' disease cannot be ruled out since other serogroups and species may also cause disease.
Additional Information:	Only detects *L. pneumophila* serogroup 1. All other serogroups and other Legionella species must be detected by culture. Refer to CDC website: http://www.cdc.gov/legionella/index.html
Purpose of Test:	Detect presence of *Legionella pneumophila* serogroup 1 antigen in urine.
Method:	EIA
Interfering Substances:	Specimens may produce a false positive result from patients with bacteremia (Streptococcus pneumonia) pulmonary conditions and urinary tract infection (*Escherichia coli, Enterobacter cloacae).*
Testing Site:	MD Department of Health Laboratories Administration, Central Laboratory 1770 Ashland Avenue, Baltimore, Maryland 21205
Comment:	Some individuals have been shown to excrete antigen for an extended period of time, so a positive ELISA reaction may reflect a recent but not active infection. **Early treatment with appropriate antibiotics may also decrease antigen excretion in some individuals.** Serologic results should not be used as a sole means for diagnosis, treatment, or for the assessment of a patient's health. Clinical correlation is required.

TEST:	**Legionella Culture**
Synonym:	*Legionella pneumophila* culture isolation/identification
Laboratory/Phone:	443-681-3938/3931
Turnaround Time:	10-14 days from receipt in the laboratory
Specimen Required:	Sputum, lung tissue, other body tissue, pleural fluid, transtracheal aspiration, lung exudate, lung biopsy/autopsy, lung abscess material.
Specimen identification:	The specimen/sample must be properly labeled and include patient's name or unique patient/sample identifier matching the test requisition or electronic test order.
Specimen Volume (Optimum):	1 ml sputum; trans tracheal aspirate,biopsy;1 gram lung tissue; 1 ml lung exudate; 1 cc lung biopsy; 50 ml bronchoalveolar lavage (BAL); 1 ml lung abscess material; 7 ml blood in an isolator tube; collect in sterile container.
Specimen Volume (Minimum):	Half of the optimum amount
Collect:	Specimen in sterile screw capped container. Prevent specimen from drying. DO NOT USE SALINE IN SPECIMEN COLLECTION. BAL specimens containing saline are acceptable.
Form:	MDH Form #4676 Infectious Agents: Culture/Detection (Order Forms: 443-681-3777 or form may be downloaded from MDH Laboratory website). **Indicate specimen type using the "Specimen Code" on form.** Date specimen collected **MUST** be provided.
Packaging and Shipping*:	Specimens must be packaged in a triple packaging system to ensure that under normal conditions of transport they cannot break, be punctured or leak their contents (Refer to pages 9 & 10 for triple packing guidance). ***Refer to current Federal regulations for specific shipping requirements.**
Continued Next Page>	

Transport Conditions:	Refrigerate and ship within 48 hours; if delayed, freeze for a maximum of a week at -20°C and transport frozen. Transport Isolator at 2-8°C. Place each specimen in a separate, individually sealed bag.
Specimen Rejection Criteria:	Specimen received after prolonged delay (more than 48 hours after collection), Swab specimen, improper labeling; specimen received in grossly leaking transport container; urine, stool, wounds or other culture material from non-respiratory sites.
Availability:	Monday through Friday.
Results and Interpretation:	**POSITIVE:** Presence of *Legionella pneumophila* or *Legionella* spp. **NEGATIVE**: *Legionella* not isolated
Reference Range:	Culture negative for Legionella species.
Additional Information:	http://www.cdc.gov/legionella/index.html
Purpose of Test:	Isolation and identification of Legionella species.
Method:	Culture, staining, biochemical testing.
Interfering Substances/Limitations:	Avoid contamination with normal respiratory flora.
Testing Site:	MD Department of Health Laboratories Administration, Central Laboratory 1770 Ashland Avenue, Baltimore, Maryland 21205
Comment:	Culture staining can distinguish between some *Legionella pneumophila* serogroups.

TEST:	**Leishmaniasis Serology (CDC Referral)**
Synonym:	Leishmania Kala azar, Leishmania donovoni, Leishmania major
Laboratory/Phone:	443-681-3938/3931
Turnaround Time:	18 business days (CDC Referral)
Specimen Required:	Serum, plasma
Specimen identification:	The specimen/sample must be properly labeled and include patient's name or unique patient/sample identifier matching the test requisition or electronic test order.
Specimen Volume (Optimum):	2 ml. (Whole Blood)
Specimen Volume (Minimum):	0.5 ml. (Whole Blood)
Collect:	Red-top vacutainer (Serum) or Lavender-top vacutainer (Plasma)
Form:	MDH Form #4677 Serological Testing (Order Forms: 443-681-3777 or form may be downloaded from MDH Laboratory website). Indicate specimen type using the "Specimen Code" on form.
Packaging and Shipping*:	Specimens must be packaged in a triple packaging system to ensure that under normal conditions of transport they cannot break, be punctured or leak their contents (Refer to pages 9 & 10 for triple packing guidance). *Refer to current Federal regulations for specific shipping requirements.
Transport Conditions:	Ambient temperature for specimens on the blood clot (whole blood specimens transported on ice packs are acceptable), separated serum at 2-8°C (refrigerated) or -20°C (frozen).
Specimen Rejection Criteria:	Hemolysis; insufficient volume
Availability:	Monday through Friday
Results and Interpretation:	Given on CDC report
Additional Information:	http://www.cdc.gov/parasites/leishmaniasis/index.html
Purpose of Test:	Detect antibodies which may be due to Leishmania parasite infections.
Methods:	Antibody detection
Interfering Substances:	Icteric, hemolyzed, lipemic specimen
Processing Site for CDC referral:	MD Department of Health Laboratories Administration, Central Laboratory 1770 Ashland Avenue, Baltimore, MD 21205
Comment:	**Contact the MD Department of Health Epidemiologist at (410)767-6700 for prior approval of specimen submission. Required supplemental information: Exposure and travel history, include other relevant risk factors; clinical symptoms, treatment and relevant lab results.**

TEST:	Leptospira Serology
Synonym:	Leptospira Antibody, Leptospirosis
Laboratory/Phone:	443-681-3938/3931
Turnaround Time:	5 business days
Specimen Required:	Serum, plasma
Specimen identification:	The specimen/sample must be properly labeled and include patient's name or unique patient/sample identifier matching the test requisition or electronic test order.
Specimen Volume (Optimum):	2 ml. (Whole Blood)
Specimen Volume (Minimum):	1 ml. (Whole Blood)
Collect:	Red-top vacutainer (Serum) or Lavender-top vacutainer (Plasma)
Form:	MDH Form #4677 Serological Testing (Order Forms: 443-681-3777 or form may be downloaded from MDH Laboratory website). **Indicate specimen type using the "Specimen Code" on form.** Date specimen collected **MUST** be provided.
Packaging and Shipping*:	Specimens must be packaged in a triple packaging system to ensure that under normal conditions of transport they cannot break, be punctured or leak their contents (Refer to pages 9 & 10 for triple packing guidance). ***Refer to current Federal regulations for specific shipping requirements.**
Transport Conditions:	Ambient temperature for specimens on the blood clot (whole blood specimens transported on ice packs are acceptable), separated serum at 2-8°C (refrigerated) or -20°C (frozen). Specimens must be tested within 7 days of collection. If shipping is delayed beyond 7 days, serum must be frozen at -20°C and shipped on dry ice.
Specimen Rejection Criteria:	Hemolysis; insufficient volume, specimen collected > 7 days prior to arrival without being frozen
Availability:	Monday through Friday
Results and Interpretation:	**Reactive:** Indicates presence of IgM antibodies. Antibody presence alone cannot be used for diagnosis as antibodies from prior exposure may circulate for a prolong period of time. **Non-reactive**: IgM antibody is not present in the sample or is below the detection level. **Borderline:** A second specimen should be collected in 14 days.
Additional Information:	Titers generally fall below detectable levels within 9 months to 1 year. http://www.cdc.gov/leptospirosis/
Purpose of Test:	Detect antibodies to Leptospira species
Method:	ImmunoDOT
Interfering Substances:	Hemolysis, lipemia
Testing Site:	MD Department of Health Laboratories Administration, Central Laboratory 1770 Ashland Avenue, Baltimore, Maryland 21205
Comment:	Antibody titers to leptospirosis may be delayed or substantially decreased by early and intensive antibiotic treatment. Serologic results should not be used as a sole means for diagnosis, treatment, or for the assessment of a patient's health. Clinical correlation is required.

TEST:	*Listeria monocytogenes* (ABCs (previously BIDS))
Synonym:	Active Bacterial Core Surveillance (ABCs) (Bacterial Invasive Disease Surveillance) *Listeria monocytogenes* is handled as an ABCs isolate and evaluated by the National Antimicrobial Resistance Monitoring Systems (NARMS) Program. Refer to instructions for **ABCs (previously BIDS)**.
Laboratory/Phone:	Microbiology 443-681-3952

TEST:	Lyme Serology
Synonym:	*Borrelia burgdorferi*: Refer to instructions for *Borrelia burgdorferi* serology.
Laboratory/Phone:	443-681-3938/3931

TEST:	Malta Fever
Synonym:	Bang's Disease; Undulant fever; Malta Fever; Rock of Gibraltar Fever: Refer to instructions for **Brucella serology** or ***Brucella* species, culture**.
Laboratory/Phone:	Office of Laboratory Emergency Preparedness and Response: **410-925-3121 (24/7 emergency contact number)** Select Agents Microbiology Laboratory: 443-681-3954 Division of Microbiology Laboratory: 443-681-3952

TEST:	Malaria Identification and Quantitation
Synonym:	Plasmodium species identification and determination of percent parasitemia (quantitation).
Laboratory/Phone:	443-681-3952
Turnaround Time:	5-7 business days
Specimen Required:	Thin and thick film slides (preferably stained) and whole blood
Specimen Identification:	The specimen/sample must be properly labeled and include patient's name and a second identifier (date of birth or a unique identifier such as medical record number); these identifiers must match the test requisition or electronic test order.
Specimen Volume (Optimum):	2 ml (whole blood
Specimen Volume (Minimum):	0.5 ml (whole blood)
Collect:	Lavender top (EDTA) vacutainer
Form:	**Maryland Department of Health Infectious Agents Form# 4676; select Blood Parasites test, enter B for specimen source (blood), indicate Malaria speciation and patient's recent travel history.** (Order Forms: 443-681-3777 or form may be downloaded from MDH Laboratory website).
Packaging and Shipping*:	Glass slides must be enclosed in an appropriate slide carrier (plastic or cardboard) to prevent breakage. Blood specimens must be packaged in a triple packaging system to ensure that under normal conditions of transport they cannot break, be punctured or leak their contents (Refer to pages 9 & 10 for triple packing guidance). ***Refer to current Federal regulations for specific shipping requirements.**
Transport Conditions:	Ambient temperature for both glass slides and blood specimen (although blood specimens transported with cold packs are acceptable).
Specimen Rejection Criteria:	Broken glass slides, excessively hemolyzed blood, insufficient volume, frozen blood
Availability:	Monday through Friday
Results and Interpretation:	Plasmodium species (P. falciparum, P. malariae, P. vivax, P. ovale or P. knowlesi) detected/not detected and percentage of red blood cells infected
Reference Range:	Plasmodium species not detected
Additional Information:	
Purpose of Test:	To identify/verify the presence or absence of a Plasmodium species infection and enumerate the number for red blood cells that are infected (% parasitemia).
Method:	Microscopic examination
Interfering Substances:	Hemolysis of blood
Testing Site:	MD Department of Health Laboratories Administration, Central Laboratory 1770 Ashland Avenue, Baltimore, Maryland 21205
Comment:	

TEST:	Malaria serology (CDC Referral)
Synonym:	*Plamodium falciparum, Plasmodium vivax, Plasmodium malariae, parasite*
Laboratory/Phone:	443-681-3938/3931
Turnaround Time:	18 business days (CDC Referral)
Specimen Required:	Serum, plasma
Specimen identification:	The specimen/sample must be properly labeled and include patient's name or unique patient/sample identifier matching the test requisition or electronic test order.
Specimen Volume (Optimum):	2 ml. (Whole Blood)
Specimen Volume (Minimum):	0.5 ml. (Whole Blood)
Collect:	Red-top vacutainer (Serum) or Lavender-top vacutainer (Plasma)

Continued Next Page>

Form:	MDH Form #4677 Serological Testing (Order Forms: 443-681-3777 or form may be downloaded from MDH Laboratory website). Indicate specimen type using the "Specimen Code" on form.
Packaging and Shipping*:	Specimens must be packaged in a triple packaging system to ensure that under normal conditions of transport they cannot break, be punctured or leak their contents (Refer to pages 9 & 10 for triple packing guidance). *Refer to current Federal regulations for specific shipping requirements.
Transport Conditions:	Ambient temperature for specimens on the blood clot (whole blood specimens transported on ice packs are acceptable), separated serum at 2-8°C (refrigerated) or -20°C (frozen).
Specimen Rejection Criteria:	Hemolysis; insufficient volume
Availability:	Monday through Friday
Results and Interpretation:	Given on CDC report
Additional Information: Purpose of Test: Methods: Interfering Substances: **Processing Site for CDC referral:** Comment:	http://www.cdc.gov/malaria/ Detect antibodies which may be due to Plasmodium infections. IFA, Antibody Detection Icteric, hemolyzed, lipemic specimen MD Department of Health Laboratories Administration, Central Laboratory 1770 Ashland Avenue, Baltimore, MD 21205 **Contact the MD Department of Health Epidemiologist at (410)767-6700 for prior approval of specimen submission. Required supplemental information: Exposure and travel history, include other relevant risk factors; clinical symptoms, treatment and relevant lab results.**

TEST:	**Measles Virus Culture**
Synonym:	Measles Virus culture: Refer to instructions for **Virus Culture**.
Laboratory/Phone:	Virology: 443-681-3934

TEST:	**Measles IgG Antibody–Measles Immunity Screen**
Synonym:	Anti Rubeola IgG; Measles IgG antibody; Rubeola / Measles immunity test
Laboratory/Phone:	Vaccine Preventable Disease/443-681-3889
Turnaround Time:	2-5 business days
Specimen Required:	Serum
Specimen identification:	The specimen/sample must be properly labeled and include patient's name or unique patient/sample identifier matching the test requisition or electronic test order.
Specimen Volume (Optimum):	5 ml. (Whole blood) or 4 ml. (Serum)
Specimen Volume (Minimum):	3 ml. (Whole blood) or 2 ml. (Serum)
Collect:	Red-top vacutainer or Serum Separator ("Tiger" or gold top) vacutainer.
Form:	MDH Form #4677 Serological Testing (Order Forms: 443-681-3777 or form may be downloaded from MDH Laboratory website). **Indicate specimen type using the "Specimen Code" next to Rubeola (Measles) Immunity Screen or MMRV Immunity Screen.**
Packaging and Shipping*:	Specimens must be packaged in a triple packaging system to ensure that under normal conditions of transport they cannot break, be punctured or leak their contents (Refer to pages 9 & 10 for triple packing guidance). ***Refer to current Federal regulations for specific shipping requirements.**
Transport Conditions:	Ambient temperature for specimens on the blood clot (whole blood specimens transported on ice packs are acceptable), separated serum at 2-8°C (refrigerated) or -20°C (frozen). Refrigerated specimen must be tested within 7 days of collection.
Specimen Rejection:	Discrepancy between name on tube and name on form, unlabeled specimen; hemolytic; lipemic; gross bacterial contamination. Specimens collected > 7 days prior to submission.
Availability:	Service available only to state and local health departments Monday to Friday.

Continued Next Page>

Results and Interpretation:	**Negative:** Indicates no detectable IgG antibody to Measles virus. A negative result indicates no current or previous infection with Measles virus. Such individuals are presumed to be susceptible to primary infection. However, specimen taken too early during a primary infection may not have detectable levels of IgG antibody. If primary infection is suspected, another specimen (convalescent) should be taken in 8-14 days and tested concurrently in the same assay with the original (acute) specimen to look for seroconversion. If acute specimen is negative and convalescent specimen is positive, seroconversion has taken place and a primary Measles virus infection is indicated. **Equivocal:** Equivocal results are indeterminate. Patient may or may not have immunity to Measles Virus. This result is not acceptable proof of immunity. **Positive:** Indicates evidence of Measles IgG antibodies. This suggests past or current infection with Measles virus, via acquired immunity or immunization and probable protection from clinical infection (immunity).
Additional Information:	For more information, see the CDC link at: https://www.cdc.gov/measles/index.html
Purpose of Test:	For detection of IgG antibodies to Measles virus. The test can be used to evaluate single sera for immune status.
Method:	Chemiluminescent Immunoassay (CLIA)
Interfering Substances:	Test results in immunocompromised patients should be interpreted with caution.
Testing Site:	MDH Laboratories Administration, Central Laboratory 1770 Ashland Avenue, Baltimore, Maryland 21205
Comment:	A diagnosis should not be made on the basis of anti-Measles results alone. Test results should be interpreted in conjunction with the clinical evaluation and the results of other diagnostic procedures. The antibody titer of a single serum specimen cannot be used to determine a recent infection. Paired samples (acute and convalescent) should be collected and tested concurrently to demonstrate seroconversion. Samples collected too early in the course of an infection may not have detectable levels of IgG. In such cases, a second sample may be collected after 2-7 weeks and tested concurrently with the original sample to look for seroconversion. A positive Measles IgG test in neonates should be interpreted with caution since passively acquired maternal antibody can persist for up to 6 months.

TEST:	**Measles IgM EIA**
Synonym:	Anti-Measles IgM; Rubeola/Measles IgM antibody.
Laboratory/Phone:	Vaccine Preventable Disease/443-681-3889
Turnaround Time:	2-5 business days
Specimen Required:	Serum
Specimen identification:	The specimen/sample must be properly labeled and include patient's name or unique patient/sample identifier matching the test requisition or electronic test order.
Specimen Volume (Optimum):	5 ml. (Whole blood) or 4 ml. (Serum)
Specimen Volume (Minimum):	3 ml. (Whole blood) or 2 ml. (Serum)
Collect:	Red-top vacutainer or Serum Separator ("Tiger" or gold top) vacutainer.
Form:	MDH Form #4677 Serological Testing (Order Forms: 443-681-3777 or form may be downloaded from MDH Laboratory website). **Write "Measles IgM" on form. Indicate specimen type using the "Specimen Code".** **Prior approval by MDH Epidemiology (410-767-6628) required.**
Packaging and Shipping*:	Specimens must be packaged in a triple packaging system to ensure that under normal conditions of transport they cannot break, be punctured or leak their contents (Refer to pages 9 & 10 for triple packing guidance). ***Refer to current Federal regulations for specific shipping requirements.**
Transport Conditions:	Ambient temperature for specimens on the blood clot (whole blood specimens transported on ice packs are acceptable), separated serum at 2-8°C (refrigerated) or -20°C (frozen). Refrigerated specimen must be tested within 7 days of collection.
Specimen Rejection:	Discrepancy between name on tube and name on form, unlabeled specimen; hemolytic; lipemic; gross bacterial contamination. Specimens collected > 7 days prior to submission.
Availability:	Monday to Friday. T**est available only to MDH epidemiologists for outbreak investigations. Prior approval by MDH Epidemiology (410-767-6628) required.**
Continued Next Page>	

Results and Interpretation:	**Negative:** No detectable Measles IgM antibodies. A negative result indicates no current infection with Measles virus. However, specimens taken too early during a primary infection may not have detectable levels of IgM antibody. If a primary infection is suspected, another specimen should be taken within 7 days and tested concurrently in the same assay with the original specimen to look for seroconversion. **Equivocal:** Equivocal specimens are indeterminate. Another specimen should be collected after 7 days and retested. **Positive:** Indicates evidence of Measles IgM antibodies. This suggests primary or reactivated infection with Measles virus.
Additional Information:	For more information, see the CDC link at: https://www.cdc.gov/measles/index.html
Purpose of Test:	For detection of IgM antibodies to measles virus. **Test available only to MDH epidemiologists for outbreak investigations. Prior approval by MDH Epidemiology (410-767-6628) required.**
Method:	ELISA
Interfering Substances:	High levels of Measles IgG and Rheumatoid factor can cause false positive or negative results. CMV IgM, HSV1 IgM, and HSV2 IgM antibodies cross react and may lead to false positive results. Some antinuclear antibodies have been found to cause a false positive reaction. Potential cross-reactivity with RSV and parainfluenza cannot be ruled out. Test results from immunocompromised patients should be interpreted with caution.
Testing Site:	MDH Laboratories Administration, Central Laboratory 1770 Ashland Avenue, Baltimore, Maryland 21205
Comment:	Results of the Measles IgM ELISA are not by themselves diagnostic and should be interpreted in light of the patient's clinical condition and results of other diagnostic procedures. Samples taken too early during the course of a primary infection may not have detectable levels of Measles specific IgM. A negative result does not rule out a primary infection with virus. The Measles IgM ELISA cannot distinguish the difference between vaccine-induced antibody and antibody resulting from a natural infection. False positive IgM results may be obtained from patients with autoimmune disease. The performance of the Measles IgM ELISA has not been validated using neonatal samples.

TEST:	**Melioidosis (Burkholderia pseudomallei)**
Synonym:	*Burkholderia* (formerly *Pseudomonas*) *pseudomallei*; B. pseudomallei; Melioidosis: Refer to instructions for ***Burkholderia mallei*** **and** ***Burkholderia pseudomallei.***
Laboratory/Phone:	Office of Laboratory Emergency Preparedness and Response: **410-925-3121 (24/7 emergency contact number)** Select Agents Microbiology Laboratory: 443-681-3954 Division of Microbiology Laboratory: 443-681-3952

TEST:	**Methicillin Resistant *Staph aureus* (MRSA) culture**
Synonym:	MRSA (rule out), Methicillin Resistant *Staph aureus* (MRSA) culture
Laboratory/Phone:	Microbiology 443-681-3952
Turnaround Time:	2-3 days [from specimen receipt in the Laboratory]
Specimen Required:	Nasal swab; nasopharyngeal swab, tissue
Specimen Identification:	Specimen should be labeled with patient's last and first name, patient's address, DOB, specimen type/source, and the date and time of collection. The specimen/sample must be properly labeled and match the test requisition or electronic test order.
Specimen Volume (Optimum):	One (1) swab
Specimen Volume (Minimum):	N/A
Collect:	Culturette tube with transport medium
Form:	MDH Form #4676 Infectious Agents: Culture/Detection (Order Forms: 443-681-3777 or form may be downloaded from MDH Laboratory website). **Indicate specimen type using the "Specimen Code" on form.**
Packaging and Shipping*:	Specimens must be packaged in a triple packaging system to ensure that under normal conditions of transport they cannot break, be punctured or leak their contents (Refer to pages 9 & 10 for triple packing guidance). ***Refer to current Federal regulations for specific shipping requirements.**
Transport Conditions:	Store and ship at room temperature, ship as quickly as possible.
Continued Next Page>	

Specimen Rejection Criteria:	The following rejection criteria are designed to prevent the reporting of inaccurate results and to avoid misleading information that might lead to misdiagnosis and inappropriate therapy. A request for a new specimen will provide appropriate materials and clinically relevant information to support good patient care. ▪ Unlabeled or improperly labeled specimen ▪ Non-sterile or leaking container ▪ Inappropriate specimen transport conditions ▪ Illegible, or no submitter information on the request form ▪ Mismatched form and specimen ▪ Broken specimen/sample container ▪ The wrong specimen for test request ▪ Inappropriate outfit for requested test ▪ Illegible or no patient information on the specimen ▪ Expired transport media ▪ Specimen received after prolonged delay (usually more than 72 hours)
Availability:	Monday through Friday
Results and Interpretation:	MRSA isolated and identified
Reference Range:	MRSA was not detected
Additional Information:	N/A
Purpose of Test:	Detect the presence of MRSA
Method:	Broth amplification, plate culture, isolation and identification, Cefoxitin disc screen to identify methicillin resistance.
Interfering Substances:	N/A
Testing Site:	MD Department of Health Laboratories Administration, Central Laboratory 1770 Ashland Avenue, Baltimore, Maryland 21205
Comment:	N/A

TEST:	**MRSA (rule out)**
Synonym:	Methicillin Resistant *Staph aureus* (MRSA) culture: Refer to instructions for **Methicillin Resistant *Staph aureus* (MRSA) culture**.
Laboratory/Phone:	Microbiology 443-681-3952

TEST:	**Mumps Virus Culture**
Synonym:	Mumps Virus culture: Refer to instructions for **Virus Culture**.
Laboratory/Phone:	Virology: 443-681-3934
Specimens:	1 Buccal swab in VTM with a requisition for each specimen. Refer to instructions for Virus Culture.

TEST:	**Mumps Antibody IgG EIA (Mumps Immunity Screen)**
Synonym:	Anti-Mumps IgG; Mumps immunity test
Laboratory/Phone:	Vaccine Preventable Disease/443-681-3889
Turnaround Time:	2-5 business days
Specimen Required:	Serum
Specimen identification:	The specimen/sample must be properly labeled and include patient's name or unique patient/sample identifier matching the test requisition or electronic test order.
Specimen Volume (Optimum):	5 ml. (Whole blood) or 4 ml. (Serum)
Specimen Volume (Minimum):	3 ml. (Whole blood) or 2 ml. (Serum)
Collect:	Red-top vacutainer or Serum Separator ("Tiger" or gold top) vacutainer.
Form:	MDH Form #4677 Serological Testing (Order Forms: 443-681-3777 or form may be downloaded from MDH Laboratory website). **Indicate specimen type using the "Specimen Code" next to Mumps Immunity Screen or MMRV Immunity Screen.**
Packaging and Shipping*:	Specimens must be packaged in a triple packaging system to ensure that under normal conditions of transport they cannot break, be punctured or leak their contents (Refer to pages 9 & 10 for triple packing guidance). ***Refer to current Federal regulations for specific shipping requirements.**
Continued Next Page>	

Transport Conditions:	Ambient temperature for specimens on the blood clot (whole blood specimens transported on ice packs are acceptable), separated serum at 2-8°C (refrigerated) or -20°C (frozen). Refrigerated specimen must be tested within 7 days of collection.
Specimen Rejection:	Discrepancy between name on tube and name on form, unlabeled specimen; hemolytic; lipemic; gross bacterial contamination. Specimens collected > 7 days prior to submission.
Availability:	Service available only to state and local health departments Monday to Friday.
Results and Interpretation:	**Negative:** Indicates no detectable IgG antibody to Mumps virus. A negative results indicate no current or previous infection with Mumps virus. Such individuals are presumed to be susceptible to primary infection. Specimen taken too early during a primary infection may not have detectable levels of IgG antibody. If primary infection is suspected, another specimen (convalescent) should be taken in 8-14 days and tested concurrently in the same assay with the original (acute) specimen to test for seroconversion. If acute specimen is negative and convalescent specimen is positive, seroconversion has taken place and a primary Mumps virus infection is indicated. **Equivocal:** Equivocal results are indeterminate. Patient may or may not have immunity to Mumps Virus. It is not acceptable proof of immunity. **Positive:** Indicates evidence of Mumps IgG antibodies This suggests past or current infection with Mumps virus, via acquired immunity or vaccination and probable protection from clinical infection (immunity).
Additional Information:	For more information, see the CDC link at: https://www.cdc.gov/mumps/
Purpose of Test:	For detection of IgG antibodies to Mumps virus, the test can be used to evaluate single sera for immune status.
Method:	Chemiluminescent Immunoassay(CLIA)
Interfering Substances:	Test results from an immunocompromised patients should be interpreted with caution.
Testing Site:	MDH Laboratories Administration, Central Laboratory 1770 Ashland Avenue, Baltimore, Maryland 21205
Comment:	A diagnosis should not be made on the basis of the anti-Mumps results alone. Test results should be interpreted in conjunction with the clinical evaluation and the results of other diagnostic procedures. The antibody titer of a single serum specimen cannot be used to determine a recent infection. Paired samples (acute and convalescent) should be collected and tested concurrently to demonstrate seroconversion. Samples collected too early in the course of an infection may not have detectable levels of IgG. In such cases, a second sample may be collected after 2-7 weeks and tested concurrently with the original sample to test for seroconversion. A positive Mumps IgG test in neonates should be interpreted with caution since passively acquired maternal antibody can persist for up to 6 months.

TEST:	**Mumps IgM Antibody IFA**
Synonym:	Anti-Mumps IgM; Mumps IgM IFA
Laboratory/Phone:	Vaccine Preventable Disease/443-681-3889
Turnaround Time:	2-5 business days
Specimen Required:	Serum
Specimen identification:	The specimen/sample must be properly labeled and include patient's name or unique patient/sample identifier matching the test requisition or electronic test order.
Specimen Volume (Optimum):	5 ml. (Whole blood) or 4 ml. (Serum)
Specimen Volume (Minimum):	3 ml. (Whole blood) or 2 ml. (Serum)
Collect:	Red-top vacutainer or Serum Separator ("Tiger" or gold top) vacutainer.
Form:	MDH Form #4677 Serological Testing (Order Forms: 443-681-3777 or form may be downloaded from MDH Laboratory website). **Write "Mumps IgM" on form. Indicate specimen type using the "Specimen Code".** **Prior approval by MDH Epidemiology (410-767-6628) required.**
Packaging and Shipping*:	Specimens must be packaged in a triple packaging system to ensure that under normal conditions of transport they cannot break, be punctured or leak their contents (Refer to pages 9 & 10 for triple packing guidance). ***Refer to current Federal regulations for specific shipping requirements.**
Transport Conditions:	Ambient temperature for specimens on the blood clot (whole blood specimens transported on ice packs are acceptable), separated serum at 2-8°C (refrigerated) or -20°C (frozen). Refrigerated specimen must be tested within 7 days of collection.
Specimen Rejection Criteria:	Discrepancy between name on tube and name on form, unlabeled specimen; hemolytic; lipemic; gross bacterial contamination. Specimens collected > 7 days prior to submission.
Continued Next Page>	

Availability:	Monday to Friday**. Test available only to MDH epidemiologists for outbreak investigations. Prior approval by MDH Epidemiology (410-767-6628) required.**
Results and Interpretation:	**Negative:** No significant level of Mumps IgM antibodies detected. A negative result indicates no current infection with Mumps virus. However, specimens taken too early during a primary infection may not have detectable levels of IgM antibody. If a primary infection is suspected, another specimen should be taken within 7 days and tested concurrently in the same assay with the original specimen to look for seroconversion **Positive:** Evidence of Mumps IgM antibodies detected and indicative of current or recent infection.
Additional Information:	For more information, see the CDC link at: https://www.cdc.gov/mumps/
Purpose of Test:	For the detection of IgM antibodies to Mumps virus. **Test available only to MDH epidemiologists for outbreak investigations. Prior approval by MDH Epidemiology (410-767-6628) required.**
Method:	IFA
Interfering Substances:	Blood should be collected at least one hour after meals to avoid lipemic serum, as excess lipids may cause false negative results. IgM anti-cell antibodies, if present in the serum, may interfere with the Mumps IgM test. Antibodies to Parainfluenza viruses may cross-react. High Mumps IgG or Rheumatoid factor may cause false positive or negative results. Test results in an immunocompromised patients should be interpreted with caution.
Testing Site:	MDH Laboratories Administration, Central Laboratory 1770 Ashland Avenue, Baltimore, Maryland 21205
Comment:	Results of the Mumps IgM IFA are not by themselves diagnostic and should be interpreted in light of the patient's clinical condition and results of other diagnostic procedures. Samples taken too early during the course of a primary infection may not have detectable levels of mumps specific IgM. A negative result does not rule out a primary infection with mumps virus. False positive anti-mumps IgM results may be obtained from patients with autoimmune disease. The performance of the Mumps IgM IFA has not been validated using neonatal samples.

TEST:	***Mycobacterium tuberculosis* culture**
Synonym:	AFB culture, Acid Fast Bacteria Identification (Acid Fast Bacilli)
Laboratory/Phone:	Microbiology - Mycobacteriology / 443-681-3942
Turnaround Time:	AFB smear: 24 hours [Note all times are from specimen receipt in the Laboratory] Nucleic Acid Amplification (GeneXpert): 48 hours Positive culture: 14-21 days. Reported as soon as detected. Negative culture: 8 weeks Susceptibility Testing: up to 17 days from culture positivity
Specimen Required:	Preferred: Sputum Other Acceptable: respiratory aspirate, bronchial wash, bronchoalveolar lavage (BAL), body fluids, CSF, tissue, urine, lymph node.
Specimen identification:	Specimen should be labeled with patient's last and first name, DOB, specimen type/source, and the date and time of collection. The specimen/sample must be properly labeled and match the test requisition or electronic test order.
Specimen Volume (Optimum):	Sputum, aspirate or CSF: 3-5 mls Body fluid: < 10 mls
Specimen Volume (Minimum):	Sputum aspirate or CSF: > 1 ml Body Fluid: > 5 mls
Continued Next Page>	

Collect:	In a sterile, leak-proof container, e.g., a 50 ml conical tube, collection of early morning sputum specimens on each of three (3) consecutive days is optimum. For optimal pulmonary specimens, collect sputum from the lung after a deep, productive cough. Do not pool specimens. Label induced sputum specimens as "induced" since they resemble saliva. Gastric lavage specimens should be collected in a hospital and sent to the Central Laboratory immediately for processing. If specimen transport is delayed, recovery of mycobacteria is severely compromised (since mycobacteria die rapidly in gastric washing). Indicate source of specimen on the lab form. Note: If > 1 hour delay, neutralize specimen with 100 mg sodium carbonate. Tissue: Submit skin lesions or other tissue; keep moistened with sterile saline. Store refrigerated. Do not use waxed container. Keep blood and CSF at room temperature. Blood in SPS (yellow top) or Heparin (green top) vacutainer.
Form:	MDH Form #4676 Infectious Agents: Culture/Detection (Order Forms: 443-681-3777 or form may be downloaded from MDH Laboratory website). **Indicate specimen type using the "Specimen Code" on form.**
Packaging and Shipping*:	Specimens must be packaged in a triple packaging system to ensure that under normal conditions of transport they cannot break, be punctured or leak their contents (Refer to pages 9 & 10 for triple packing guidance). ***Refer to current Federal regulations for specific shipping requirements.**
Transport Conditions*: **Blood and CSF should be kept at room temperature*	Should be received by Central Laboratory within 24 hours after collection Preferred: Refrigerate, 2-8°C Other Acceptable: Ambient temperature
Specimen Rejection Criteria:	The following rejection criteria are designed to prevent the reporting of inaccurate results and to avoid misleading information that might lead to misdiagnosis and inappropriate therapy. A request for a new specimen will provide appropriate materials and clinically relevant information to support good patient care. ▪ Unlabeled or improperly labeled specimen ▪ Non-sterile or leaking container ▪ Inappropriate specimen transport conditions ▪ Illegible, or no submitter information on the request form ▪ Mismatched form and specimen ▪ Broken specimen/sample container ▪ The wrong specimen for test request ▪ Inappropriate outfit for requested test ▪ Illegible or no patient information on the specimen ▪ Expired transport media
Availability:	Monday through Friday, 8:00 A.M. to 4:30 P.M.
Results and Interpretation:	AFB Smear: Acid-fast bacilli seen on smears from this specimen. The acid-fast stain does not differentiate *M. tuberculosis* from other non-tuberculous mycobacteria. AFB Culture: Positive culture – Mycobacterial identification given. Negative culture – No mycobacteria were recovered from this specimen by culture. Client is notified of positive smear/culture, MTD or first positive M. tuberculosis complex culture.
Referred isolate for identification:	Provide specimen collection body site and date collected.
Reference Range:	Complete identification of clinically significant isolates. Antimicrobial susceptibilities performed on all initial isolates of *M. tuberculosis* complex. Drug resistant isolates will be tested for susceptibility to second-line anti-mycobacterial drugs. Anti-microbial susceptibilities performed on Mycobacterium other than *M. tuberculosis* complex isolated by request with justification for testing (immunocompromised patient, multiple site isolates, HIV patient, etc.).
Additional Information:	DNA probes (cultures only) available for M. tuberculosis complex and M. avium-intracellulare complex, M. gordonae and M. kansasii as indicated. All other mycobacterial identification performed by Vitek MS MALDI-TOF.

Continued Next Page>

Purpose of Test:	The AFB smear can determine the presence of mycobacteria in clinical specimens by microscopic examination. AFB smears are made from the sediments of specimens that have been decontaminated and concentrated by centrifugation for culture. Special solid and liquid growth media are inoculated with the concentrated specimen for isolation and identification of mycobacteria.
Method:	Standard reference procedures for stain and culture.
Interfering Substances:	Propylene glycol, waxed containers, tap water (may contain saprophytic mycobacteria), antimicrobial therapy, food particles, mouthwash.
Testing Site:	MD Department of Health Laboratories Administration, Central Laboratory 1770 Ashland Avenue, Baltimore, Maryland 21205
Nucleic Acid Amplification Assay:	Will be performed by Cepheid GeneXpert done on all new smear positive patient specimens or referred specimen concentrates on patients with a high suspicion for active tuberculosis. Patient must be on treatment < three (3) days or not at all. Test should not be requested routinely. Please contact the laboratory at 443-681-3942 for further ordering guidance.

TEST:	**Mycoplasma Serology**
Synonym:	*Mycoplasma pneumoniae*
Laboratory/Phone:	443-681-3938/3931
Turnaround Time:	5 business days
Specimen Required:	Serum
Specimen identification:	The specimen/sample must be properly labeled and include patient's name or unique patient/sample identifier matching the test requisition or electronic test order.
Specimen Volume (Optimum):	2 ml. (Whole Blood)
Specimen Volume (Minimum):	1 ml. (Whole Blood)
Collect:	Red-top vacutainer tube
Form:	MDH Form #4677 Serological Testing (Order Forms: 443-681-3777 or form may be downloaded from MDH Laboratory website). **Indicate specimen type using the "Specimen Code" on form.** Date specimen collected **MUST** be provided.
Packaging and Shipping*:	Specimens must be packaged in a triple packaging system to ensure that under normal conditions of transport they cannot break, be punctured or leak their contents (Refer to pages 9 & 10 for triple packing guidance). ***Refer to current Federal regulations for specific shipping requirements.**
Transport Conditions:	Ambient temperature for specimens on the blood clot (whole blood specimens transported on ice packs are acceptable), separated serum at 2-8°C (refrigerated) or -20°C (frozen). If shipping is delayed beyond 2 days, serum must be frozen at -20°C and shipped on dry ice.
Specimen Rejection Criteria:	Grossly hemolyzed or lipemic specimens, unlabeled specimen, leaking container, insufficient volume, mismatch between labeling of specimen and test request form, specimen collected > 2 days prior to arrival without being frozen.
Availability:	Monday through Friday
Results and Interpretation:	**NEGATIVE**—No significant amount of IgG/IgM antibodies detected, no presumptive evidence of current/previous infection **POSITIVE**—IgG/IgM antibodies detected, evidence of a past/recent infection **EQUIVOCAL**—Immunological status cannot be determined. Please redraw patient in 1-3 weeks
Additional Information:	http://www.cdc.gov/pneumonia/atypical/mycoplasma/
Purpose of Test:	Detect antibodies to *Mycoplasma pneumoniae*
Methods:	EIA
Interfering Substances:	Hemolysis, lipemia
Testing Site:	MD Department of Health Laboratories Administration, Central Laboratory 1770 Ashland Avenue, Baltimore, Maryland 21205
Comment:	May not detect a recent infection. If suspicion of a Mycoplasma infection, take a second sample at least 14 days later for additional testing. Serologic results should not be used as a sole means for diagnosis, treatment, or for the assessment of a patient's health. Clinical correlation is required.

TEST:	***Neisseria gonorrhoeae* Culture**
Synonym:	GC Culture; Gonorrhea Culture; *N. gonorrhoeae* Culture: Refer to instructions for **Gonorrhea Culture**.
Laboratory/Phone:	Microbiology 443-681-3952

TEST:	***Neisseria meningitidis* (ABCs - previously BIDS))**
Synonym:	Active Bacterial Core Surveillance (ABCs) (Bacterial Invasive Disease Surveillance) *Neisseria meningitidis*: Refer to instructions for **ABCs (previously BIDS)**.
Lab/Phone:	Microbiology 443-681-3952

TEST:	**Ohara's disease**
Synonym:	*Francisella tularensis, Pasteurella tularensis*, tularemia, rabbit fever, deerfly fever, Ohara's disease, Francis disease: Refer to instructions for ***Francisella tularensis* culture** or ***Francisella tularensis* Antibody**.
Laboratory/Phone:	Office of Laboratory Emergency Preparedness and Response: **410-925-3121 (24/7 emergency contact number)** Select Agents Microbiology Laboratory: 443-681-3954 Division of Microbiology Laboratory: 443-681-3952

TEST:	**Ova and Parasites Microscopic Examination**
Synonym:	Amebiasis, Giardia, Parasitic identification, worm identification
Laboratory/Phone:	Microbiology 443-681-3952 or 443-681-4570
Turnaround Time:	5 business days [Note time is from specimen receipt in the Laboratory]
Specimen Required:	Feces: Minimum of three (3) specimens collected over a 7-10 day period.
Specimen Identification:	Specimen should be labeled with patient's last and first name, patient's address, DOB, specimen type/source, and the date and time of collection. The specimen/sample must be properly labeled and match the test requisition or electronic test order.
Specimen Volume (Optimum):	Please refer to the directions available with stool collection kit. There is no maximum limit on the amount of stool collected.
Specimen Volume (Minimum):	Please refer to the directions available with stool collection kit. As a minimum amount, collect several grams (or teaspoon amounts).
Collect:	Please refer to the directions available with stool collection kit.
Form:	MDH Form #4676 Infectious Agents: Culture/Detection (Order Forms: 443-681-3777 or form may be downloaded from MDH Laboratory website). **Indicate specimen type using the "Specimen Code" on form.**
Packaging and Shipping*:	Specimens must be packaged in a triple packaging system to ensure that under normal conditions of transport they cannot break, be punctured or leak their contents (Refer to pages 9 & 10 for triple packing guidance). ***Refer to current Federal regulations for specific shipping requirements.**
Transport Conditions:	Send the specimen to the laboratory as soon as possible at room temperature.
Specimen Rejection Criteria:	The following rejection criteria are designed to prevent the reporting of inaccurate results and to avoid misleading information that might lead to misdiagnosis and inappropriate therapy. A request for a new specimen will provide appropriate materials and clinically relevant information to support good patient care. ▪ Unlabeled or improperly labeled specimen ▪ Non-sterile or leaking container ▪ Inappropriate specimen transport conditions ▪ Illegible, or no submitter information on the request form ▪ Mismatched form and specimen ▪ Broken specimen/sample container ▪ The wrong specimen for test request ▪ Inappropriate outfit for requested test ▪ Illegible or no patient information on the specimen ▪ Expired transport media

Continued Next Page>

Availability:	Monday through Friday
Results and Interpretation:	Genus and species
Reference Range:	No Ova or Parasites found
Additional Information:	Collect all fecal specimens prior to the administration of antibiotics or anti-diarrheal agents. Avoid contamination with urine or water from the toilet.
Purpose of Test:	Diagnosis of intestinal parasite
Method:	Microscopic: Wet mount and permanent stain using Eco-fix and Eco-stain.
Interfering Substances:	Avoid the use of mineral oil, bismuth and barium prior to fecal collection since all of these substances may interfere with detection or identification of intestinal parasites.
Testing Site:	MD Department of Health Laboratories Administration, Central Laboratory 1770 Ashland Avenue, Baltimore, Maryland 21205
Comment:	N/A

TEST:	**Parainfluenza Virus (Types 1, 2, and 3) Viral Culture**
Synonym:	Parainfluenza Virus (Types 1, 2, and 3): Refer to instructions for **Virus Culture**.
Laboratory/Phone:	Virology: 443-681-3934

TEST:	**Parasitic examination (Ova and Parasites Microscopic Examination)**
Synonym:	Amebiasis, Giardia, Entamoeba, Parasite identification, worm identification: Refer to instructions for **Ova and Parasites Microscopic Examination**.
Laboratory/Phone:	Microbiology 443-681-3952

TEST:	***Pasteurella tularensis (Francisella tularensis)* culture**
Synonym:	*Pasteurella tularensis*, tularemia, rabbit fever, deerfly fever, Ohara's disease, Francis disease: Refer to instructions for ***Francisella tularensis* culture**.
Laboratory/Phone:	Office of Laboratory Emergency Preparedness and Response: **410-925-3121 (24/7 emergency contact number)** Select Agents Microbiology Laboratory: 443-681-3954 Division of Microbiology Laboratory: 443-681-3952

TEST:	**Pertussis (Bordetella pertussis) PCR & Culture**
Synonym:	B. pertussis, pertussis, Whooping Cough **Refer to instructions for Bordetella pertussis PCR and culture.**
Laboratory/Phone:	Molecular Biology: 443-681-3924 Microbiology 443-681-3952

TEST:	**Pertussis Serology (Bordetella pertussis)**
Synonym:	IgG Anti-Bordetella pertussis toxin assay. **Refer to instructions for Bordetella Pertussis Toxin IgG Antibody**
Laboratory/Phone:	Vaccine Preventable Disease/443-681-3889

TEST:	**Pinworm Examination**
Synonym:	Cellulose tape preparation for Enterobius vermicularis
Laboratory/Phone:	Microbiology 443-681-3952
Turnaround Time:	24 hrs. [from specimen receipt in the Laboratory] Monday through Friday
Specimen Required:	Cellulose tape preparation from the skin of the perianal area.
Specimen identification:	Specimen should be labeled with patient's last and first name, patient's address, DOB, specimen type/source, and the date and time of collection. The specimen/sample must be properly labeled and match the test requisition or electronic test order.
Specimen Volume (Optimum):	N/A

Continued Next Page>

Specimen Volume (Minimum):	N/A
Collect:	To obtain a sample from the perianal area, peel back the tape by gripping the labeled end, and, with the tape looped (adhesive side outward) over a wooden tongue depressor that is held firmly against the slide and extended about 2-5 cm beyond it, press the tape firmly several times against the right and left perianal folds. Smooth the tape back on the slide, adhesive side down. Label with patient's name and date.
Form:	MDH Form #4676 Infectious Agents: Culture/Detection (Order Forms: 443-681-3777 or form may be downloaded from MDH Laboratory website). **Indicate specimen type using the "Specimen Code" on form.**
Packaging and Shipping*:	Specimens must be packaged in a triple packaging system to ensure that under normal conditions of transport they cannot break, be punctured or leak their contents (Refer to pages 9 & 10 for triple packing guidance). ***Refer to current Federal regulations for specific shipping requirements.**
Transport Conditions:	Room temperature
Specimen Rejection Criteria:	The following rejection criteria are designed to prevent the reporting of inaccurate results and to avoid misleading information that might lead to misdiagnosis and inappropriate therapy. A request for a new specimen will provide appropriate materials and clinically relevant information to support good patient care. ▪ Unlabeled or improperly labeled specimen ▪ Inappropriate specimen transport conditions ▪ Illegible, or no submitter information on the request form ▪ Mismatched form and specimen ▪ Broken specimen/sample container ▪ The wrong specimen for test request ▪ Illegible or no patient information on the specimen
Availability:	Monday through Friday
Results and Interpretation:	Organism and stage
Reference Range:	*Enterobius vermicularis* NOT found
Additional Information:	Pinworm eggs are usually infectious. The female pinworm deposits eggs on the perianal skin only sporadically, without multiple tapes (taken consecutively, each morning), it is not possible to determine if the patient is positive or negative for the infection.
Purpose of Test:	Detection of human pinworm infections
Method:	Microscopic
Interfering Substances:	Opaque tape
Testing Site:	MD Department of Health Laboratories Administration, Central Laboratory 1770 Ashland Avenue, Baltimore, Maryland 21205
Comment:	N/A

TEST:	**Plague *(Yersinia pestis)***
Synonym:	Plague; *Yersinia pestis; Pasteurella pestis*: Refer to instructions for ***Yersinia pestis* culture**.
Laboratory/Phone:	Office of Laboratory Emergency Preparedness and Response: **410-925-3121 (24/7 emergency contact number)** Select Agents Microbiology Laboratory: 443-681-3954 Division of Microbiology Laboratory: 443-681-3952

TEST:	**Polio Virus, Virus Culture**
Synonym:	Polio Virus Culture (Enterovirus, including Echovirus, Coxsackie, and Polio): Refer to instructions for **Virus Culture**.
Laboratory/Phone:	Virology: 443-681-3934

TEST:	**Powassan Virus IgM Serology (Tick-borne Disease Panel)**
Synonym:	Tick-borne virus **Refer to instructions in Tick-Borne Disease Panel**
Laboratory/Phone:	443-681-3936/3931
Specimen Required:	Serum; CSF
Results and Interpretation:	
Additional Information:	https://www.cdc.gov/ticks/tickbornediseases/powassan.html
Purpose of Test:	For the detection of IgM antibodies to Powassan virus
Methods:	MAC-ELISA
Comment:	The results are used for EPIDEMIOLOGICAL purposes and a report will not be issued.

TEST:	**Q-fever serology**
Synonym:	Coxiella burnetii, Q-fever: Refer to instructions for Coxiella Serology.
Laboratory/Phone:	443-681-3938/3931

TEST:	**QuantiFERON Plus**
Synonym:	Interferon-gamma release assay, IGRA
Laboratory/Phone:	(443) 681-3942
Turnaround Time:	5 business days from receipt of specimen.
Specimen Required:	1 mL of blood collected in assay-specific collection tubes.
Specimen Identification:	Specimen must be labeled with patient name and one other unique identifier, such as date of birth.
Specimen Volume (Optimum):	1 mL
Specimen Volume (Minimum):	0.8 mL
Collect:	1 mL of blood into each of four (4) specialized QuantiFERON blood collection tubes. All tubes must be vigorously shaken and incubated at 37° C within sixteen (16) hours of collection.
Form:	MDH Form #4676 Infectious Agents: Culture/Detection (Order Forms: 443-681-3777 or form may be downloaded from MDH Laboratory website).
Packaging and Shipping*:	Specimens must be packaged in a triple packaging system to ensure that under normal conditions of transport they cannot break, be punctured or leak their contents (Refer to pages 9 & 10 for triple packing guidance). ***Refer to current Federal regulations for specific shipping requirements.**
Transport Conditions:	Must be transported at 2 to 25° C.
Specimen Rejection Criteria:	The following rejection criteria are designed to prevent the reporting of inaccurate results and to avoid misleading information that might lead to misdiagnosis and inappropriate therapy. A request for a new specimen will provide appropriate materials and clinically relevant information to support good patient care. • Unlabeled or improperly labeled specimen • Insufficient specimen volume • Inappropriate or expired specimen collection tubes • Improper specimen collection and handling
Availability:	Monday through Friday, 8:00 A.M. to 4:30 P.M., only to local health departments having received previous training on the proper collection and processing of specimens. Please contact the testing laboratory at (443)681-3942 for further information.
Results and Interpretation:	Positive: Positive for previous exposure to *M. tuberculosis* complex (note: does not cross-react with the BCG vaccine). Negative: Negative for previous exposure to *M. tuberculosis* complex. Indeterminate: Unable to yield a valid test result due to poor patient immune response or improper specimen processing.

Continued Next Page>

Reference Range:	An increase in interferon-gamma of 0 to 0.34 IU/mL in whole blood serum after exposure to *M. tuberculosis* complex-specific antigens. An increase of 0.35 IU/mL or greater indicates a positive test result.
Additional Information:	All positive and indeterminate test results are repeated for confirmation of findings before a result is reported.
Purpose of Test:	The assay detects previous exposure to *M. tuberculosis* complex, indicating the possibility of latent infection. The assay may be used in all instances when performing a tuberculin skin test (TST) would be deemed appropriate.
Method:	Enzyme Linked Immunosorbent Assay (ELISA) is performed as per the assay's FDA-cleared instructions.
Interfering Substances:	Administering a live-virus vaccine prior to collection of blood for this assay may increase the instances of false-positive or indeterminate test results.
Testing Site:	MD Department of Health Laboratories Administration, Central Laboratory 1770 Ashland Avenue, Baltimore, Maryland 21205
Comment:	

TEST:	**Rabbit fever**
Synonym:	*Francisella tularensi; Pasteurella tularensis*, tularemia, deerfly fever, Ohara's disease, Francis disease: Refer to instructions for ***Francisella tularensis* culture** or ***Francisella tularensis* Antibody**.
Laboratory/Phone:	Office of Laboratory Emergency Preparedness and Response: **410-925-3121 (24/7 emergency contact number)** Select Agents Microbiology Laboratory: 443-681-3954 Division of Microbiology Laboratory: 443-681-3952

TEST:	**Rabies Antibody Titer (RFFIT)**
Synonym:	RFFIT Test
Laboratory/Phone:	Division of Virology and Immunology/Rabies Lab 443-681-3771
Turnaround Time:	15 working days
Specimen Required:	Serum/Blood
Specimen identification:	The specimen/sample must be properly labeled and include patient's name or unique patient/sample identifier, date of birth, and specimen collection date matching the test requisition or electronic test order.
Specimen Volume (Optimum):	5 ml whole blood or 2 ml of serum
Specimen Volume (Minimum):	2 ml whole blood or 1 ml serum
Collect:	Red-top vacutainer or Zebra-top serum separator vacutainer
Form:	MDH Form #4677 Serological Testing (Order Forms: 443-681-3777 or form may be downloaded from MDH Laboratory website). **Indicate specimen type using the "Specimen Code" on form.**
Packaging and Shipping*:	Specimens must be packaged in a triple packaging system to ensure that under normal conditions of transport they cannot break, be punctured or leak their contents (Refer to pages 9 & 10 for triple packing guidance). ***Refer to current Federal regulations for specific shipping requirements.**
Transport Conditions:	Whole blood specimens transported on ice packs; separated serum at 2-8°C (refrigerated)
Specimen Rejection Criteria:	Discrepancy between name on tube and name on form, unlabeled tube; insufficient quantity of serum for testing; hemolysis; lipemia; gross bacterial contamination.
Availability:	Monday through Friday
Results and Interpretation:	Positive 0.5 IU/mL or greater (immunity) Negative indicates no detectable antibody to the rabies virus or the presence of detectable antibody < 0.5 IU/mL.
Reference Range:	Patient's with a titer > 0.5 IU/mL. is considered to have adequate immune response.
Additional Information:	Provide patient's rabies vaccination history.
Purpose of Test:	For detection of rabies antibody
Method:	Rapid Fluorescent Focus Inhibition Test (RFFIT)
Interfering Substances:	Icteric, hemolyzed, lipemic or heat inactivation of specimen
Testing Site:	MD Department of Health Laboratories Administration, Central Laboratory 1770 Ashland Avenue, Baltimore, Maryland 21205

Continued Next Page>

Comment:	**Restricted Test: Services provided to State and Local government employees (e.g. animal control, etc.). Maryland residents requiring testing refer to the Rabies Laboratory website: https://health.maryland.gov/laboratories/Pages/Rabies.aspx**

TEST:	**Rat Bite Fever**
Synonym:	*Streptobacillus moniliformis* Culture; Haverhill Fever: Refer to instructions for ***Streptobacillus moniliformis* Culture**.
Laboratory/Phone:	Microbiology 443-681-3952

TEST:	**Respiratory Syncytial Virus (RSV) Virus Culture**
Synonym:	Respiratory Syncytial Virus (RSV) : Refer to instructions for **Virus Culture**.
Laboratory/Phone:	Virology: 443-681-3934

TEST:	**Rock of Gibraltar Fever**
Synonym:	*Brucellosis*, Bang's Disease, Undulant fever, Malta Fever: Refer to instructions for ***Brucella* serology** or ***Brucella* species culture**.
Laboratory/Phone:	Office of Laboratory Emergency Preparedness and Response: **410-925-3121 (24/7 emergency contact number)** Select Agents Microbiology Laboratory: 443-681-3954 Division of Microbiology Laboratory: 443-681-3952

TEST:	**Rickettsia (Spotted Fever Group) Serology (Tick-borne Disease Panel)**
Synonym:	RMSF IgG serology; Rocky Mountain spotted fever, *Rickettsia rickettsii* **Refer to instructions in Tick-Borne Disease Panel**
Laboratory/Phone:	443-681-3938/3931
Specimen Required:	Serum
Results and Interpretation:	**Titers ≥ 1:64 are suggestive of possible early infection, declining titers due to past exposure, or cross-reactivity with a related organism.**
Additional Information:	https://www.cdc.gov/ticks/tickbornediseases/rickettsiosis.html https://www.cdc.gov/ticks/tickbornediseases/rmsf.html
Purpose of Test:	For the detection of IgG antibodies to Rickettsia (spotted fever group)
Method:	Immunofluorescence assay (IFA)
Comment:	Cross reaction between *Rickettsia* Spotted Fever Group species occurs. Serology cannot differentiate between the species. A four-fold increase in titer between acute and convalescent serum specimens supports the diagnosis of recent infection. Acute phase sera should be collected within the first week after onset of illness, and convalescent phase sera, 2-4 weeks after onset.

TEST:	Rubella IgG (Rubella Immunity Screen).
Synonym:	Anti-Rubella IgG; German Measles IgG antibody; Rubella immunity test
Laboratory/Phone:	Vaccine Preventable Disease/443-681-3889
Turnaround Time:	2-5 business days
Specimen Required:	Serum
Specimen identification:	The specimen/sample must be properly labeled and include patient's name or unique patient/sample identifier matching the test requisition or electronic test order.
Specimen Volume (Optimum):	5 ml. (Whole blood) or 4 ml. (Serum)
Specimen Volume (Minimum):	3 ml. (Whole blood) or 2 ml. (Serum)
Collect:	Red-top vacutainer or Serum Separator ("Tiger" or gold top) vacutainer.
Form:	MDH Form #4677 Serological Testing (Order Forms: 443-681-3777 or form may be downloaded from MDH Laboratory website). **Indicate specimen type using the "Specimen Code" next to Rubella Immunity Screen or MMRV Immunity Screen.**
Packaging and Shipping*:	Specimens must be packaged in a triple packaging system to ensure that under normal conditions of transport they cannot break, be punctured or leak their contents (Refer to pages 9 & 10 for triple packing guidance). ***Refer to current Federal regulations for specific shipping requirements.**
Transport Conditions:	Ambient temperature for specimens on the blood clot (whole blood specimens transported on ice packs are acceptable), separated serum at 2-8°C (refrigerated) or -20°C (frozen). Refrigerated specimen must be tested within 7 days of collection.
Specimen Rejection Criteria:	Discrepancy between name on tube and name on form, unlabeled specimen; hemolytic; lipemic; gross bacterial contamination. Specimens collected > 7 days prior to submission.
Availability:	Service available only to state and local health departments Monday to Friday.
Results and Interpretation:	**Negative:** Indicates no detectable IgG antibody to Rubella virus. A negative results indicates no current or previous infection with Rubella virus. Such individuals are presumed to be susceptible to primary infection. However, specimen taken too early during a primary infection may not have detectable levels of IgG antibody. If primary infection is suspected, another specimen (convalescent) should be taken in 8-14 days and tested concurrently in the same assay with the original (acute) specimen to look for seroconversion. If acute specimen is negative and convalescent specimen is positive, seroconversion has taken place and a primary rubella virus infection is indicated. **Equivocal:** Equivocal results are indeterminate. Patient may or may not have immunity to Rubella Virus. It is not acceptable proof of immunity. **Positive:** Indicates evidence of Rubella IgG antibodies. This suggests past or current infection with Rubella virus, via acquired immunity or vaccination and probable protection from clinical infection (Immunity).
Additional Information:	For more information, see the CDC link at: https://www.cdc.gov/rubella/
Purpose of Test:	For detection of IgG antibodies to Rubella virus. The test can be used to evaluate single sera for immune status or paired sera to demonstrate seroconversion.
Method:	Chemiluminescent Immunoassay (CLIA)
Interfering Substances:	Test results in an immunocompromised patients should be interpreted with caution.
Testing Site:	MDH Laboratories Administration, Central Laboratory 1770 Ashland Avenue, Baltimore, Maryland 21205
Comment:	A diagnosis should not be made on the basis of anti-Rubella results alone. Test results should be interpreted in conjunction with the clinical evaluation and the results of other diagnostic procedures. The antibody titer of a single serum specimen cannot be used to determine a recent infection. Paired samples (acute and convalescent) should be collected and tested concurrently to demonstrate seroconversion. Samples collected too early in the course of an infection may not have detectable levels of IgG. In such cases, a second sample may be collected after 2-7 weeks and tested concurrently with the original sample to look for seroconversion. A positive rubella IgG test in neonates should be interpreted with caution since passively acquired maternal antibody can persist for up to 6 months.

TEST:	Rubella IgM Antibody
Synonym:	Anti-Rubella IgM; Rubella IgM antibody for Rubella/ German Measles - acute infection
Laboratory/Phone:	Vaccine Preventable Disease/443-681-3889
Turnaround Time:	2-5 business days
Specimen Required:	Serum
Specimen identification:	The specimen/sample must be properly labeled and include patient's name or unique patient/sample identifier matching the test requisition or electronic test order.
Specimen Volume (Optimum):	5 ml. (Whole blood) or 4 ml. (Serum)
Specimen Volume (Minimum):	3 ml. (Whole blood) or 2 ml. (Serum)
Collect:	Red-top vacutainer or Serum Separator ("Tiger" or gold top) vacutainer.
Form:	MDH Form #4677 Serological Testing (Order Forms: 443-681-3777 or form may be downloaded from MDH Laboratory website). **Write "Rubella IgM" on form. Indicate specimen type using the "Specimen Code". Prior approval by MDH Epidemiology (410-767-6628) required.**
Packaging and Shipping*:	Specimens must be packaged in a triple packaging system to ensure that under normal conditions of transport they cannot break, be punctured or leak their contents (Refer to pages 9 & 10 for triple packing guidance). ***Refer to current Federal regulations for specific shipping requirements.**
Transport Conditions:	Ambient temperature for specimens on the blood clot (whole blood specimens transported on ice packs are acceptable), separated serum at 2-8°C (refrigerated) or -20°C (frozen). Refrigerated specimen must be tested within 7 days of collection.
Specimen Rejection Criteria:	Discrepancy between name on tube and name on form, unlabeled specimen; hemolytic; lipemic; gross bacterial contamination. Specimens collected > 7 days prior to submission.
Availability:	Monday to Friday. **Test available only to MDH epidemiologists for outbreak investigations. Prior approval by MDH Epidemiology (410-767-6628) required.**
Results and Interpretation:	**Negative:** Indicates no detectable Rubella IgM antibodies. A negative result indicates no current infection with rubella virus. However, specimens taken too early during a primary infection may not have detectable levels of IgM antibody. If a primary infection is suspected, another specimen should be taken within 7 days and tested concurrently in the same assay with the original specimen to look for seroconversion **Equivocal:** Equivocal specimens are indeterminate. Another specimen should be collected after 7 days and retested. **Positive:** Indicates evidence of Rubella IgM antibodies. This suggests primary or reactivated infection with Rubella.
Additional Information:	For more information, see the CDC link at: https://www.cdc.gov/rubella/
Purpose of Test:	**Test available only to MDH epidemiologists for outbreak investigations. Prior approval by MDH Epidemiology (410-767-6628) required.**
Method:	ELISA
Interfering Substances:	High anti-Rubella IgG or Rheumatoid factor may cause false negative or false positive results. Test results in an immunocompromised patients should be interpreted with caution. Heterotypic IgM antibody responses may occur in patients infected with Epstein-Barr virus, and sera from patients with infectious mononucleosis may have false positive results. Patients with autoimmune disease may present with false positive results.
Testing Site:	MDH Laboratories Administration, Central Laboratory 1770 Ashland Avenue, Baltimore, Maryland 21205
Comment:	Results of the Rubella IgM ELISA are not by themselves diagnostic and should be interpreted in light of the patient's clinical condition and results of other diagnostic procedures. Samples taken too early during the course of a primary infection may not have detectable levels of rubella specific IgM. A negative result does not rule out a primary infection. This assay cannot distinguish the difference between vaccine-induced antibody and antibody resulting from a natural infection. The performance of the Rubella IgM EIA has not been validated using neonatal samples.

TEST:	**Salmonella Culture** **Enteric Culture, Routine (Salmonella, Shigella, Campylobacter, and Shiga toxins–producing *E. coli*)**
Synonym:	Stool culture for enteric pathogens; enteric pathogens; stool culture and sensitivity; feces culture: Refer to instructions for **Enteric Culture, Routine (Salmonella, Shigella, Campylobacter, and Shiga toxins–producing *E. coli*)**.
Laboratory/Phone:	Microbiology-Enterics 443-681-4570

TEST:	**Salmonella typing**
Synonym:	Salmonella isolate for typing (referral isolate)
Laboratory/Phone:	Microbiology-Enterics 443-681-4570
Turnaround Time:	**For epidemiological purposes only**. CDC TAT: 8 weeks. For additional questions, contact the laboratory 443-681-4570
Specimen Required:	Pure culture on agar slant in screw cap tube.
Specimen Identification:	Specimen should be labeled with patient's last and first name, patient's address, DOB, specimen type/source, and the date and time of collection. The specimen/sample must be properly labeled and match the test requisition or electronic test order.
Specimen Volume (Optimum):	Salmonella isolated from culture
Specimen Volume (Minimum):	N/A
Collect:	N/A
Form:	MDH Form #4676 Infectious Agents: Culture/Detection (Order Forms: 443-681-3777 or form may be downloaded from MDH Laboratory website). **Indicate specimen type using the "Specimen Code" on form.**
Packaging and Shipping*:	Specimens must be packaged in a triple packaging system to ensure that under normal conditions of transport they cannot break, be punctured or leak their contents (Refer to pages 9 & 10 for triple packing guidance). ***Refer to current Federal regulations for specific shipping requirements.**
Transport Conditions:	At room temperature. Do not freeze or refrigerate.
Specimen Rejection Criteria:	The following rejection criteria are designed to prevent the reporting of inaccurate results and to avoid misleading information that might lead to misdiagnosis and inappropriate therapy. A request for a new specimen will provide appropriate materials and clinically relevant information to support good patient care. ▪ Unlabeled or improperly labeled specimen ▪ Non-sterile or leaking container ▪ Inappropriate specimen transport conditions ▪ Illegible, or no submitter information on the request form ▪ Mismatched form and specimen ▪ Broken specimen/sample container ▪ The wrong specimen for test request ▪ Inappropriate outfit for requested test ▪ Illegible or no patient information on the specimen ▪ Expired transport media ▪ Specimen frozen
Availability:	Monday through Friday
Results and Interpretation:	Salmonella somatic and flagellar antigens identified.
Reference Range:	N/A
Additional Information:	SUBCULTURE TO AGAR SLANT BEFORE TRANSPORTING. DO NOT SEND CULTURE PLATES. MAKE SURE CULTURE IS GROWING/VIABLE.
Purpose of Test:	Salmonella serotyping
Method:	Isolate is subcultured to confirm purity. Salmonella serological testing is performed by slide agglutination and tube agglutination tests using somatic (O) and flagella (H) antisera. Biochemical identification also.
Interfering Substances/ Limitations:	Submission of isolate on inhibitory media.
Testing Site:	MD Department of Health Laboratories Administration, Central Laboratory 1770 Ashland Avenue, Baltimore, Maryland 21205
Comment:	N/A

TEST:	SARS-CoV-2 Assay (Aptima)
Synonym:	SARS-CoV-2 Assay (Aptima)
Laboratory/Phone:	Virus Isolation Laboratory / 443-681-3937
Turnaround Time:	2 Days
Specimen Required:	Nasopharyngeal, Oropharyngeal (including throat swab) in Viral Transport Media
Specimen Identification:	Label specimen with full name exactly matching test requisition and date of collection. The specimen must be properly labeled and match the test requisition or electronic test order.
Specimen Volume (Optimum):	3ml
Specimen Volume (Minimum):	1ml
Collect:	Specimen should be collected in Viral Transport Media (VTM). VTM can be ordered by the local health department by calling 443-681-3777 and submitting via email or fax the Outfit Supply Requisition form. NOTE: Do not collect NP swabs in saline or MTM.
Form:	MDH Form #4676 Infectious Agents: Culture/ Detection (Order forms: 443-681-3777 or form may be downloaded from the MDH Laboratory Website). Indicate specimen type using the "Specimen Code" on form. Date specimen collected MUST be provided.
Packaging and Shipping*:	Specimens must be packaged in a triple packaging system to ensure that under normal conditions of transport they cannot break, be punctured or leak their contents (Refer to pages 9 & 10 for triple packing guidance). ***Refer to current Federal regulations for specific shipping requirements.**
Transport Conditions:	Specimens collected greater than 96 hours needs to be frozen
Specimen Rejection Criteria:	Specimen collected greater than 96 hours and not frozen
Availability:	Monday – Friday (Preapproved Submitters Only)
Results and Interpretation:	Negative: SARS-CoV-2 not detected Positive: SARS-CoV-2 detected Invalid: Specimen failed in the Aptima SARS-CoV-2 nucleic acid amplification assay. Please re-collect and submit another specimen for testing.
Reference Range:	Qualitative Infectious Assay. Healthy individuals should be negative.
Additional Information:	**Restricted Test (Preapproved Submitters Only)**
Purpose of Test:	Qualitative detection of RNA from SARS-CoV-2
Method:	Transcription Mediated Amplification (TMA)
Interfering Substances:	Guanidinium Thiocynate or Guanidine materials
Testing Site:	MD Department of Health Laboratories Administration, Central Laboratory 1770 Ashland Avenue, Baltimore, Maryland 21205
Comment:	

TEST:	SARS-CoV-2 Real Time rt-PCR
Synonym:	SARS CoV2 Real-Time rt-PCR
Laboratory/Phone:	443-681-3924
Turnaround Time:	2-5 Business Days
Specimen Required:	Lower Respiratory (sputum, bronchoalveolar lavage, and tracheal aspirate) OR Upper respiratory (nasopharyngeal swab (NP), oropharyngeal swab (OP), and Nasopharyngeal Wash/Aspirate or Nasal Aspirate) **NP is preferred**
Specimen Identification:	2 different specimen identifiers (i.e. Name and DOB) and Collection Date
Specimen Volume (Optimum):	2-3mL
Specimen Volume (Minimum):	1mL
Collect:	Universal Transport Media or Viral Transport Media (with Swab)
Form:	Infectious Agents: Culture/Detection
Packaging and Shipping*:	Specimens must be packaged in a triple packaging system to ensure that under normal conditions of transport they cannot break, be punctured or leak their contents (Refer to pages 9 & 10 for triple packing guidance). ***Refer to current Federal regulations for specific shipping requirements.**

Continued Next Page>

Transport Conditions:	Refrigerate specimens at 2-8°C and ship on ice pack to the Maryland Department of Health Laboratory if specimen is to be received by the lab within 72 hrs. of collection. All specimens tubed should be parafilmed and triple packaged.
Specimen Rejection Criteria:	Quantity not sufficient (<1mL), wrong transport media (Universal Transport Media or Viral Transport Media), leaked in transit, specimen received >72 hrs. from collection, respiratory specimens in "Rapid Test Lysis Buffer," or calcium alginate swabs.
Availability:	Yes
Results and Interpretation:	SARS CoV2 RNA Detected or SARS CoV2 RNA NOT Detected
Reference Range:	
Additional Information:	N/A
Purpose of Test:	Detection of SARS CoV2
Method:	Real-Time rt-PCR
Interfering Substances:	Ethanol, Bleach, and RNA Away
Testing Site:	MD Department of Health Laboratories Administration, Central Laboratory 1770 Ashland Avenue, Baltimore, Maryland 21205
Comment:	

TEST:	**SARS-CoV-2 Serology**
Synonym:	SARS-CoV-2 antibody
Laboratory/Phone:	443-681-3938/3931
Turnaround Time:	3 working days
Specimen Required:	Serum; EDTA plasma
Specimen Identification:	The specimen/sample must be properly labeled and include patient's name or unique patient/sample identifier matching the test requisition or electronic test order
Specimen Volume (Optimum):	2mL (whole blood)
Specimen Volume (Minimum):	1 mL (whole blood)
Collect:	Red-top vacutainer tube; purple-top vacutainer tube
Form:	MDH Form #4677 Serological Testing (Order Forms: 443-681-3777 or form may be downloaded from MDH Laboratory website). Indicate specimen type using the "Specimen Code" on form. Date specimen collected MUST be provided.
Packaging and Shipping*:	Specimens must be packaged in a triple packaging system to ensure that under normal conditions of transport they cannot break, be punctured or leak their contents (Refer to pages 9 & 10 for triple packing guidance). ***Refer to current Federal regulations for specific shipping requirements.**
Transport Conditions:	Ambient temperature for specimens on the blood clot (whole blood specimens transported on ice packs are acceptable), separated serum at 2-8°C (refrigerated) or -20°C (frozen). If shipping is delayed beyond 7 days, serum must be frozen at -20°C and shipped on dry ice.
Specimen Rejection Criteria:	Grossly hemolyzed specimens, unlabeled specimen, leaking container, insufficient volume, mismatch between labeling of specimen and test request form, specimen collected > 7 days prior to arrival without being frozen.
Availability:	Monday through Friday **(APPROVED SUBMITTERS ONLY)**
Results and Interpretation:	The specimen will be tested for antibodies against different antigens of the virus. Abbott ARCHITECT assay detects antibodies to the nucleocapsid antigen of SARS-CoV-2. This antibody may be present after infection with the virus. The DiaSorin LIAISON assay detects antibodies to the spike antigen of SARS-CoV-2. This antibody may be present after infection with the virus or vaccination. **NEGATIVE:** Antibodies to SARS-CoV-2 have not been detected and there is a high probability of non-infection or an early infection with low level of antibody present. **POSITIVE:** Antibodies to SARS-CoV-2 were detected.
Additional Information:	https://www.cdc.gov/coronavirus/2019-ncov/lab/serology-testing.html
Purpose of Test:	Detect antibodies which may be due to SARS-COV-2 infection
Method:	CMIA/CLIA (chemiluminescence)

Continued Next Page>

Interfering Substances:	Hemoloysis
Testing Site:	MD Department of Health Laboratories Administration, Central Laboratory 1770 Ashland Avenue, Baltimore, Maryland 21205
Comment:	Serologic results should not be used as a sole means for diagnosis, treatment, or for the assessment of a patient's health. Clinical correlation is required.

TEST:	**Shiga toxins–producing *E. coli* Culture**
Synonym:	Stool culture for enteric pathogens; enteric pathogens; stool culture and sensitivity; feces culture: Refer to instructions for **Enteric Culture, Routine (Salmonella, Shigella, Campylobacter, and Shiga toxins–producing *E. coli*)**.
Laboratory/Phone:	Microbiology-Enterics 443-681-4570

TEST:	**Shigella Culture**
Synonym:	Stool culture for enteric pathogens; enteric pathogens; stool culture and sensitivity; feces culture: Refer to instructions for **Enteric Culture, Routine (Salmonella, Shigella, Campylobacter, and Shiga toxins–producing *E. coli*)**.
Laboratory/Phone:	Microbiology - Enterics 443-681-4570

TEST:	**Shigella typing**
Synonym:	Shigella isolate for typing (referral isolate)
Laboratory/Phone:	Microbiology - Enterics / 443-681-4570
Turnaround Time:	Usually 3-5 days [from receipt in the Laboratory]. CDC TAT: 8 weeks
Specimen Required:	Pure culture on agar slant in screw cap tube.
Specimen Identification:	Specimen should be labeled with patient's last and first name, patient's address, DOB, specimen type/source, and the date and time of collection. The specimen/sample must be properly labeled and match the test requisition or electronic test order.
Specimen Volume (Optimum):	Shigella isolated from culture
Specimen Volume (Minimum):	N/A
Collect:	N/A
Form:	MDH Form #4676 Infectious Agents: Culture/Detection (Order Forms: 443-681-3777 or form may be downloaded from MDH Laboratory website). **Indicate specimen type using the "Specimen Code" on form.**
Packaging and Shipping*:	Specimens must be packaged in a triple packaging system to ensure that under normal conditions of transport they cannot break, be punctured or leak their contents (Refer to pages 9 & 10 for triple packing guidance). ***Refer to current Federal regulations for specific shipping requirements.**
Transport Conditions:	At room temperature. Do not freeze or refrigerate.
Specimen Rejection Criteria:	The following rejection criteria are designed to prevent the reporting of inaccurate results and to avoid misleading information that might lead to misdiagnosis and inappropriate therapy. A request for a new specimen will provide appropriate materials and clinically relevant information to support good patient care. ▪ Unlabeled or improperly labeled specimen ▪ Non-sterile or leaking container ▪ Inappropriate specimen transport conditions ▪ Illegible, or no submitter information on the request form ▪ Mismatched form and specimen ▪ Broken specimen/sample container ▪ The wrong specimen for test request ▪ Inappropriate outfit for requested test ▪ Illegible or no patient information on the specimen ▪ Expired transport media ▪ Specimen frozen
Availability:	Monday through Friday
Results and Interpretation:	Shigella somatic antigens identified
Reference Range:	N/A

Continued Next Page>

Additional Information:	SUBCULTURE TO AGAR SLANT BEFORE TRANSPORTING. DO NOT SEND CULTURE PLATES. MAKE SURE CULTURE IS VIABLE/GROWING.
Purpose of Test:	Shigella serotyping
Method:	Isolate is subcultured to confirm purity. Shigella serological testing is performed by a slide agglutination test using somatic (O) antisera. Biochemical analysis performed to verify Shigella identification.
Interfering Substances/Limitations:	Submission of isolate on inhibitory media.
Testing Site:	MD Department of Health Laboratories Administration, Central Laboratory 1770 Ashland Avenue, Baltimore, Maryland 21205
Comment:	N/A

TEST:	**St. Louis Encephalitis Virus (SLEV)** **(Arbovirus Endemic Panel)**
Synonym:	**Ar**thropod-**bo**rne **virus:** SLEV (St. Louis Encephalitis Virus): Refer to instructions for **Arbovirus Endemic Panel**.
Laboratory/Phone:	Virology: 443-681-3936/3931

TEST:	***Staph aureus* Culture**
Synonym:	*Staph aureus* Culture: Refer to instructions for **Foodborne Pathogens, Foodborne Pathogenic Microorganisms, Stool Culture**.
Laboratory/Phone:	Microbiology 443-681-3952

TEST:	**Stool Culture** **Enteric Culture, Routine (Salmonella, Shigella, Campylobacter, and Shiga toxins–producing *E. coli*)**
Synonym:	Stool culture for enteric pathogens; enteric pathogens; stool culture and sensitivity; feces culture: Refer to instructions for **Enteric Culture, Routine (Salmonella, Shigella, Campylobacter, and Shiga toxins–producing *E. coli*)**
Laboratory/Phone:	Microbiology-Enterics 443-681-4570

TEST:	***Streptobacillus moniliformis* Culture**
Synonym:	Rat Bite Fever; Haverhill Fever.
Laboratory/Phone:	Microbiology 443-681-3952
Turnaround Time:	2-3 weeks [from specimen receipt in the Laboratory]
Specimen Required:	Blood is the specimen of choice. Joint fluid, abscess fluid, wound exudates and lymph node are also acceptable.
Specimen Identification:	Specimen should be labeled with patient's last and first name, patient's address, DOB, specimen type/source, and the date and time of collection. The specimen/sample must be properly labeled and match the test requisition or electronic test order.
Specimen Volume (Optimum):	Draw enough blood into the blood culture bottle to make about 20% of the total volume. If citrated blood is collected, draw a total of 10 ml.
Specimen Volume (Minimum):	N/A
Collect:	Follow the blood culture kit instructions.
Form:	MDH Form #4676 Infectious Agents: Culture/Detection (Order Forms: 443-681-3777 or form may be downloaded from MDH Laboratory website). **Indicate specimen type using the "Specimen Code" on form.**
Packaging and Shipping*:	Specimens must be packaged in a triple packaging system to ensure that under normal conditions of transport they cannot break, be punctured or leak their contents (Refer to pages 9 & 10 for triple packing guidance). ***Refer to current Federal regulations for specific shipping requirements.**
Transport Conditions:	Room temperature
Availability:	Monday through Saturday
Results and Interpretation:	*S. moniliformis* present

Continued Next Page>

Reference Range:	*S. moniliformis* NOT found.
Additional Information:	Because special enrichment of media is necessary, the laboratory needs to know that an infection with *S. moniliformis* is suspected.
Purpose of Test:	Cultural confirmation of rat bite fever is very helpful for diagnosis, since the disease is not commonly seen.
Method:	Culture, convention and biochemicals.
Interfering Substances:	SPS in blood culture broth.
Testing Site:	MD Department of Health Laboratories Administration, Central Laboratory 1770 Ashland Avenue, Baltimore, Maryland 21205
Comment:	Serological tests are not readily available

TEST:	***Streptococcus pneumoniae* (ABCs - previously BIDS))**
Synonym:	Active Bacterial Core Surveillance (ABCs) (Bacterial Invasive Disease Surveillance) *Streptococcus pneumoniae*: Refer to instructions for ABCs (previously BIDS)
Laboratory/Phone:	Microbiology 443-681-3952

TEST:	***Streptococcus pyogenes* culture**
Synonym:	Group A Strep culture; Throat culture for Group A Strep Beta; Strep culture; *Streptococcus pyogenes* culture: Refer to instructions for **Group A Strep Culture**.
Laboratory/Phone:	Microbiology 443-681-3952

TEST:	**Syphilis Serology (Reflex Test)**
Synonym:	*Treponema pallidum* IgG/IgM Antibody
Laboratory/Phone:	443-681-3938/3931
Turnaround Time:	5 business days
Specimen Required:	Serum or plasma
Specimen identification:	The specimen/sample must be properly labeled and include patient's name or unique patient/sample identifier matching the test requisition or electronic test order.
Specimen Volume (Optimum):	2 ml. (Whole Blood)
Specimen Volume (Minimum):	1 ml. (Whole Blood)
Collect:	Red-top vacutainer (Serum) or Lavender-top vacutainer (Plasma)
Form:	MDH Form #4677 Serological Testing (Order Forms: 443-681-3777 or form may be downloaded from MDH Laboratory website). **Indicate specimen type using the "Specimen Code" on form.** Date specimen collected **MUST** be provided.
Packaging and Shipping*:	Specimens must be packaged in a triple packaging system to ensure that under normal conditions of transport they cannot break, be punctured or leak their contents (Refer to pages 9 & 10 for triple packing guidance). ***Refer to current Federal regulations for specific shipping requirements.**
Transport Conditions:	Ambient temperature for specimens on the blood clot (whole blood specimens transported on ice packs are acceptable), separated serum at 2-8°C (refrigerated) or -20°C (frozen). If shipping is delayed beyond 7 days, serum must be frozen at -20°C and shipped on dry ice.
Specimen Rejection Criteria:	Grossly hemolyzed, icteric, or lipemic specimens, unlabeled specimens, leaking container, insufficient volume, mismatch between labeling of specimen and test request form, specimen collected > 7 days prior to arrival without being frozen.
Availability:	Monday through Friday
Results and Interpretation:	**NEGATIVE**—Very low or no antibody is present in the sample. Does not rule out a recent or current infection **POSITVE**—Antibody is present as a result of previous or current infection with T. pallidum **EQUIVOCAL**—Suspect for infection with T. pallidum. Please submit another specimen in 2 weeks for retesting.
Additional Information:	http://www.cdc.gov/std/syphilis/
Purpose of Test:	Detect antibodies (IgM/IgG) which may be due to *Treponema pallidum*
Methods:	CLIA—Chemiluminescent Immunoassay
Interfering Substances:	Hemolysis, lipemia, icterus
	Continued Next Page>

Testing Site:	MD Department of Health Laboratories Administration, Central Laboratory 1770 Ashland Avenue, Baltimore, Maryland 21205
Comment:	All treponemal tests tend to remain reactive following treponemal infection; therefore, they should not be used to evaluate response to therapy. Because of the persistence of reactivity, probably for the life of the patient, the treponemal tests are of no value to the clinician in determining relapse or re-infection in a patient who has had a reactive result. Serologic results should not be used as a sole means for diagnosis, treatment, or for the assessment of a patient's health. Clinical correlation is required.

TEST:	**Syphilis-RPR Serology**
Synonym:	Rapid Plasma Reagin, Detect reagin antibodies associated with syphilis
Laboratory/Phone:	443-681-3938/3931
Turnaround Time:	3 business days
Specimen Required:	Serum/Plasma
Specimen identification:	The specimen/sample must be properly labeled and include patient's name or unique patient/sample identifier matching the test requisition or electronic test order.
Specimen Volume (Optimum):	2 ml. (Whole Blood)
Specimen Volume (Minimum):	1 ml. (Whole Blood)
Collect:	Red-top vacutainer (Serum) or Lavender-top vacutainer (Plasma)
Form:	MDH Form #4677 Serological Testing (Order Forms: 443-681-3777 or form may be downloaded from MDH Laboratory website). **Indicate specimen type using the "Specimen Code" on form.** *Date specimen collected* ***MUST*** *be provided.*
Packaging and Shipping*:	Specimens must be packaged in a triple packaging system to ensure that under normal conditions of transport they cannot break, be punctured or leak their contents (Refer to pages 9 & 10 for triple packing guidance). ***Refer to current Federal regulations for specific shipping requirements.**
Transport Conditions:	Ambient temperature for specimens on the blood clot (whole blood specimens transported on ice packs are acceptable), separated serum at 2-8°C (refrigerated) or -20°C (frozen). Specimens must be tested within 7 days of collection. If shipping is delayed beyond 7 days, serum must be frozen at -20°C and shipped on dry ice. NOTE: Plasma specimens must be tested within 48 hours of collection.
Specimen Rejection Criteria:	Hemolysis; insufficient volume, specimen collected > 7 days prior to arrival without being frozen
Availability:	Monday through Friday
Results and Interpretation:	**REACTIVE**- Non-Treponemal antibodies detected. **NON-REACTIVE**- Non-Treponemal antibodies not detected. False negatives occur in incubating primary and in latent syphilis
Additional Information:	
Purpose of Test:	Detect non-treponemal antibodies which may be due to syphilis, or to quantify reagin antibodies associated with syphilis infections, or to monitor response to treatment.
Method:	RPR (Rapid Plasma Reagin)
Interfering Substances:	Hemolysis, lipemia
Testing Site:	MD Department of Health Laboratories Administration, Central Laboratory 1770 Ashland Avenue, Baltimore, Maryland 21205
Comment:	RPR tests may be non-specifically reactive in other conditions. Absence of reaginic antibody does not necessarily indicate inactive infection. **Reactive specimens are quantitatively tested and reflexed to a Syphilis IgG/IgM chemiluminescent immunoassay for further serological study.** Serologic results should not be used as a sole means for diagnosis, treatment, or for the assessment of a patient's health. Clinical correlation is required.

TEST:	Syphilis Serology -VDRL
Synonym:	Venereal Disease Research Laboratory
Laboratory/Phone:	443-681-3938/3931
Turnaround Time:	5 business days
Specimen Required:	Cerebrospinal fluid (CSF)
Specimen identification:	The specimen/sample must be properly labeled and include patient's name or unique patient/sample identifier matching the test requisition or electronic test order.
Specimen Volume (Optimum):	2 ml.
Specimen Volume (Minimum):	1 ml.
Collect:	Sterile CSF
Form:	MDH Form #4677 Serological Testing (Order Forms: 443-681-3777 or form may be downloaded from MDH Laboratory website). **Indicate specimen type using the "Specimen Code" on form.** Date specimen collected **MUST** be provided.
Packaging and Shipping*:	Specimens must be packaged in a triple packaging system to ensure that under normal conditions of transport they cannot break, be punctured or leak their contents (Refer to pages 9 & 10 for triple packing guidance). ***Refer to current Federal regulations for specific shipping requirements.**
Transport Conditions:	Transport sterile CSF at 2-8°C (refrigerated) on ice packs or at -20°C (frozen) on dry ice. Specimens must be tested within 5 days of collection. If shipping is delayed beyond 5 days, CSF must be frozen at -20°C and shipped on dry ice.
Specimen Rejection Criteria:	Grossly hemolyzed specimens, unlabeled specimen, leaking container, insufficient volume, mismatch between labeling of specimen and test request form, specimen collected > 5 days prior to arrival without being frozen.
Availability:	Monday through Friday
Results and Interpretation:	**NON-REACTIVE**— May indicate that the patient does not have neurosyphilis. **REACTIVE**-- VDRL test on CSF, free of blood or other contaminants, almost always indicates past or present syphilis infection of the central nervous system.
Additional Information:	This test is only performed on Cerebrospinal fluid (CSF)
Purpose of Test:	Detect antibodies which may be due to syphilis
Methods:	Slide flocculation test
Interfering Substances:	Traces of blood or any particulate matter
Testing Site:	MD Department of Health Laboratories Administration, Central Laboratory 1770 Ashland Avenue, Baltimore, Maryland 21205
Comment:	**The VDRL is a non-treponemal test to detect lipoidal antigen to T. pallidum. VDRL is run on spinal fluid specimens only, for suspected neurosyphilis.**

TEST:	Throat Culture (Group A Strep Culture)
Synonym:	Throat culture for Group A Strep Beta; Strep culture; *Streptococcus pyogenes* culture: Refer to instructions for **Group A Strep Culture**.
Laboratory/Phone:	Microbiology 443-681-3952

TEST:	Throat culture (Bacterial Culture, Routine)
Synonym:	Aerobic culture, routine culture, throat culture: Refer to instructions for **Bacterial Culture, Routine**.
Laboratory/Phone:	Microbiology 443-681-3952

TEST:	Tick identification/Ectoparasite
Synonym:	Arthropod Identification; Tick identification/Ectoparasite: refer to instructions for **Arthropod Identification**.
Laboratory/Phone:	Microbiology 443-681-3952

TEST:	**Tick-borne Disease Panel** Panel includes: Anaplasmosis, Babesiosis, Ehrlichiosis, Lyme disease, Powassan virus, Rickettsia (spotted fever group), Tularemia
Synonym:	Vector-borne disease panel
Laboratory/Phone:	Virology: 443-681-3936/3931
Turnaround Time:	5 working days (excluding PRNT Testing)
Specimen Required:	Serum
Specimen identification:	The specimen/sample must be properly labeled and include the patient's name or unique patient/sample identifier matching the test requisition or electronic test order.
Specimen Volume (Optimum):	5 ml serum
Specimen Volume (Minimum):	3 ml serum
Collect:	Red top vacutainer tube, transfer serum to sterile tube.
Form:	MDH Form# 4677 Serological Testing (Order Forms: 443-681-3777) **For testing to be initiated, the following information MUST be provided: date of onset, and date specimen collected.**
Packaging and Shipping*:	Specimens must be packaged in a triple packaging system to ensure that under normal conditions of transport they cannot break, be punctured or leak their contents (Refer to pages 9 & 10 for triple packing guidance). ***Refer to current Federal regulations for specific shipping requirements.**
Transport Conditions:	Ambient temperature for specimens on the blood clot (whole blood specimens and serum transported on ice packs are acceptable), separated serum at 2-8°C (refrigerated) or -20°C (frozen). If shipping is delayed beyond 7 days, serum must be frozen at -20°C and shipped on dry ice.
Specimen Rejection Criteria:	Grossly hemolyzed specimens, unlabeled specimen, leaking container, and mismatch between labeling of specimen and test request form, specimen collected > 7 days prior to arrival without being frozen.
Availability:	Monday through Friday.
Results and Interpretation:	Anaplasma, Babesia, Ehrlichia, Rickettsia (spotted fever)--titer provided Lyme disease, Powassan virus—Positive, Negative, Equivocal Tularemia—Negative, Positive (with titer)
Additional Information:	https://www.cdc.gov/ticks/tickbornediseases/index.html
Purpose of Test:	For the presumptive detection of tick-borne diseases. Confirmatory testing by PRNT may be required.
Method:	IFA, CLIA, EIA, PRNT, Western Blot
Interfering Substances:	
Testing Site:	MD Department of Health Laboratories Administration, Central Laboratory 1770 Ashland Avenue, Baltimore, Maryland 21205
Comment:	Serology testing for Anaplasma, Babesia, Ehrlichia, Lyme disease, Powassan virus, Rickettsia, and Tularemia will be performed on all serum specimens. Convalescent specimen for additional testing may be required. **NOTE: The results for Powassen virus are used for EPIDEMIOLOGICAL purposes and report will not be issued.**

TEST:	**Toxocara serology (CDC Referral)**
Synonym:	Toxocara canis, Toxacara cati, Toxocariasis, Larva migrans, parasite
Laboratory/Phone:	443-681-3938/3931
Turnaround Time:	18 business days (CDC Referral)
Specimen Required:	Serum, plasma
Specimen identification:	The specimen/sample must be properly labeled and include patient's name or unique patient/sample identifier matching the test requisition or electronic test order.
Specimen Volume (Optimum):	2 ml. (Whole Blood)
Specimen Volume (Minimum):	1 ml. (Whole Blood)
Collect:	Red-top vacutainer (Serum) or Lavender-top vacutainer (Plasma)
Form:	MDH Form #4677 Serological Testing (Order Forms: 443-681-3777 or form may be downloaded from MDH Laboratory website). Indicate specimen type using the "Specimen Code" on form.
Continued Next Page>	

Packaging and Shipping*:	Specimens must be packaged in a triple packaging system to ensure that under normal conditions of transport they cannot break, be punctured or leak their contents (Refer to pages 9 & 10 for triple packing guidance). *Refer to current Federal regulations for specific shipping requirements.
Transport Conditions:	Ambient temperature for specimens on the blood clot (whole blood specimens transported on ice packs are acceptable), separated serum at 2-8°C (refrigerated) or -20°C (frozen).
Specimen Rejection Criteria:	Hemolysis; insufficient volume
Availability:	Monday through Friday
Results and Interpretation:	Given on CDC report
Additional Information:	http://www.cdc.gov/parasites/toxocariasis/
Purpose of Test:	Detect antibodies which may be due Toxocara canis infections.
Methods:	EIA, ELISA, Antibody Detection
Interfering Substances:	Icteric, hemolyzed, lipemic specimen
Processing Site for CDC referral:	MD Department of Health Laboratories Administration, Central Laboratory 1770 Ashland Avenue, Baltimore, MD 21205
Comment:	**Contact the MD Department of Health Epidemiologist at (410)767-6700 for prior approval of specimen submission. Required supplemental information: Exposure and travel history, include other relevant risk factors; clinical symptoms, treatment and relevant lab results.**

TEST:	***Toxoplasma gondii* Serology**
Synonym:	*Toxoplasma gondii* IgG or IgM antibody
Laboratory/Phone:	443-681-3938/3931
Turnaround Time:	5 business days
Specimen Required:	Serum
Specimen identification:	The specimen/sample must be properly labeled and include patient's name or unique patient/sample identifier matching the test requisition or electronic test order.
Specimen Volume (Optimum):	2 ml. (Whole Blood)
Specimen Volume (Minimum):	1 ml. (Whole Blood)
Collect:	Red-top vacutainer
Form:	MDH Form #4677 Serological Testing (Order Forms: 443-681-3777 or form may be downloaded from MDH Laboratory website). **Indicate specimen type using the "Specimen Code" on form.** Date specimen collected **MUST** be provided.
Packaging and Shipping*:	Specimens must be packaged in a triple packaging system to ensure that under normal conditions of transport they cannot break, be punctured or leak their contents (Refer to pages 9 & 10 for triple packing guidance). ***Refer to current Federal regulations for specific shipping requirements.**
Transport Conditions:	Ambient temperature for specimens on the blood clot (whole blood specimens transported on ice packs are acceptable), separated serum at 2-8°C (refrigerated) or -20°C (frozen). Specimens must be tested within 7 days of collection. If shipping is delayed beyond 7 days, serum must be frozen at -20°C and shipped on dry ice.
Specimen Rejection Criteria:	Grossly hemolyzed or lipemic specimens, unlabeled specimens, leaking container, insufficient volume, mismatch between labeling of specimen and test request form, specimen collected > 7 days prior to arrival without being frozen.
Availability:	Monday through Friday
Results and Interpretation:	**NEGATIVE**—No detectable IgG/IgM antibody to Toxoplasma gondii **POSITIVE**—Detectable IgG/IgM antibody to Toxoplasma gondii indicating current or previous infection **EQUIVOCAL**—Immunological status cannot be determined. Please submit a new specimen within 3 weeks for retesting
Additional Information:	
Purpose of Test:	Detect antibodies to *Toxoplasma gondii* (IgG or IgM)
Methods:	CLIA—Chemiluminescent Immunoassay
Interfering Substances:	Hemolysis, lipemia
Testing Site:	MD Department of Health Laboratories Administration, Central Laboratory 1770 Ashland Avenue, Baltimore, Maryland 21205
Continued Next Page>	

Comment:	Serologic results should not be used as a sole means for diagnosis, treatment, or for the assessment of a patient's health. Clinical correlation is required. The presence of IgG antibody against a particular virus or organism may not assure protection from that disease.

TEST:	**Trichinellosis Serology (CDC Referral)**
Synonym:	*Trichinosis, Trichnella spiralis*
Laboratory/Phone:	443-681-3938/3931
Turnaround Time:	18 business days (CDC Referral)
Specimen Required:	Serum, plasma
Specimen identification:	The specimen/sample must be properly labeled and include patient's name or unique patient/sample identifier matching the test requisition or electronic test order.
Specimen Volume (Optimum):	2 ml. (Whole Blood)
Specimen Volume (Minimum):	0.5 ml. (Whole Blood)
Collect:	Red-top vacutainer (Serum) or Lavender-top vacutainer (Plasma)
Form:	MDH Form #4677 Serological Testing (Order Forms: 443-681-3777 or form may be downloaded from MDH Laboratory website). Indicate specimen type using the "Specimen Code" on form.
Packaging and Shipping*:	Specimens must be packaged in a triple packaging system to ensure that under normal conditions of transport they cannot break, be punctured or leak their contents (Refer to pages 9 & 10 for triple packing guidance). *Refer to current Federal regulations for specific shipping requirements.
Transport Conditions:	Ambient temperature for specimens on the blood clot (whole blood specimens transported on ice packs are acceptable), separated serum at 2-8°C (refrigerated) or -20°C (frozen).
Specimen Rejection Criteria:	Hemolysis; insufficient volume
Availability:	Monday through Friday
Results and Interpretation:	Given on CDC report
Additional Information:	http://www.cdc.gov/parasites/trichinellosis/
Purpose of Test:	Detect antibodies which may be due Trichinella infections.
Methods:	EIA, ELISA, Antibody Detection
Interfering Substances:	Icteric, hemolyzed, lipemic specimen
Processing Site for CDC referral:	MD Department of Health Laboratories Administration, Central Laboratory 1770 Ashland Avenue, Baltimore, MD 21205
Comment:	**Contact the MD Department of Health Epidemiologist at (410)767-6700 for prior approval of specimen submission. Required supplemental information: Exposure and travel history, include other relevant risk factors (consumption of raw or undercooked pork or game meat); clinical symptoms, treatment and relevant lab results.**

TEST:	**Tuberculosis Bacteriology Culture (AFB/Mycobacterium Identification)**
Synonym:	Acid Fast Bacteria Identification (Acid Fast Bacilli); *M. Tuberculosis* culture: Refer to instructions for ***Mycobacterium tuberculosis* culture**.
Laboratory/Phone:	Microbiology - Mycobacteriology 443-681-3942

TEST:	**Tularemia**
Synonym:	*Francisella tularensis* culture, *Pasteurella tularensis*, rabbit fever, deerfly fever, Ohara's disease, Francis disease: Refer to instructions for ***Francisella tularensis* culture**.
Laboratory/Phone:	Office of Laboratory Emergency Preparedness and Response: **410-925-3121 (24/7 emergency contact number)** Select Agents Microbiology Laboratory: 443-681-3954 Division of Microbiology Laboratory: 443-681-3952

TEST:	Typhus Fever Serology
Synonym:	(Murine typhus); Typhus Fever Antibody; *R. typhi* serology
Laboratory/Phone:	443-681-3938
Turnaround Time:	5 business days
Specimen Required:	Serum
Specimen identification:	The specimen/sample must be properly labeled and include patient's name or unique patient/sample identifier matching the test requisition or electronic test order.
Specimen Volume (Optimum):	2 ml. (Whole Blood)
Specimen Volume (Minimum):	1 ml. (Whole Blood)
Collect:	Red-top vacutainer
Form:	MDH Form #4677 Serological Testing (Order Forms: 443-681-3777 or form may be downloaded from MDH Laboratory website). **Indicate specimen type using the "Specimen Code" on form.** Date specimen collected **MUST** be provided.
Packaging and Shipping*:	Specimens must be packaged in a triple packaging system to ensure that under normal conditions of transport they cannot break, be punctured or leak their contents (Refer to pages 9 & 10 for triple packing guidance). ***Refer to current Federal regulations for specific shipping requirements.**
Transport Conditions:	Ambient temperature for specimens on the blood clot (whole blood specimens transported on ice packs are acceptable), separated serum at 2-8°C (refrigerated) or -20°C (frozen). If shipping is delayed beyond 7 days, serum must be frozen at -20°C and shipped on dry ice.
Specimen Rejection Criteria:	Grossly hemolyzed specimens, unlabeled specimen, leaking container, insufficient volume, mismatch between labeling of specimen and test request form, specimen collected > 7 days prior to arrival without being frozen.
Availability:	Monday through Friday
Results and Interpretation:	Titers ≥ 1:64 are suggestive of possible early infection, declining titers due to past exposure, or cross-reactivity with a related organism.
Additional Information:	A second specimen will usually demonstrate a diagnostic four fold rise in titer for patients with active disease
Purpose of Test:	Detect *Rickettsia typhi* antibodies (IgG).
Methods:	Immunofluorescence (IFA)
Interfering Substances:	Hemolysis
Testing Site:	MD Department of Health Laboratories Administration, Central Laboratory 1770 Ashland Avenue, Baltimore, Maryland 21205
Comment:	Results are for epidemiological purposes only. Serologic results should not be used as a sole means for diagnosis, treatment, or for the assessment of a patient's health. Clinical correlation is required.

TEST:	Undulant fever
Synonym:	*Brucellosis,* Bang's Disease, Malta Fever, and Rock of Gibraltar Fever: Refer to instructions for ***Brucella* serology** or ***Brucella* species, culture.**
Laboratory/Phone:	Office of Laboratory Emergency Preparedness and Response: **410-925-3121 (24/7 emergency contact number)** Select Agents Microbiology Laboratory: 443-681-3954 Division of Microbiology Laboratory: 443-681-3952

TEST:	Urine culture (Bacterial Culture, Routine)
Synonym:	Aerobic culture, routine urine culture, urine culture: Refer to instructions for **Bacterial Culture, Routine**
Laboratory/Phone:	Microbiology 443-681-3952

TEST:	Varicella Antibody IgG (Varicella Immunity Screen)
Synonym:	Anti-Varicella/ Varicella Zoster Virus (VZV)/Chickenpox IgG; Varicella immunity test.
Laboratory/Phone:	Vaccine Preventable Disease/443-681-3889
Turnaround Time:	2-5 business days
Specimen Required:	Serum
Specimen identification:	The specimen/sample must be properly labeled and include patient's name or unique patient/sample identifier matching the test requisition or electronic test order.
Specimen Volume (Optimum):	5 ml. (Whole blood) or 4 ml. (Serum)
Specimen Volume (Minimum):	3 ml. (Whole blood) or 2 ml. (Serum)
Collect:	Red-top vacutainer or Serum Separator ("Tiger" or gold top) vacutainer.
Form:	MDH Form #4677 Serological Testing (Order Forms: 443-681-3777 or form may be downloaded from MDH Laboratory website). **Indicate specimen type using the "Specimen Code" next to Varicella Immunity Screen or MMRV Immunity Screen.**
Packaging and Shipping*:	Specimens must be packaged in a triple packaging system to ensure that under normal conditions of transport they cannot break, be punctured or leak their contents (Refer to pages 9 & 10 for triple packing guidance). ***Refer to current Federal regulations for specific shipping requirements.**
Transport Conditions:	Ambient temperature for specimens on the blood clot (whole blood specimens transported on ice packs are acceptable), separated serum at 2-8°C (refrigerated) or -20°C (frozen). Refrigerated specimen must be tested within 7 days of collection.
Specimen Rejection Criteria:	Discrepancy between name on tube and name on form, unlabeled specimen; hemolytic; lipemic; gross bacterial contamination. Specimens collected > 7 days prior to submission.
Availability:	Service available only to state and local health departments Monday to Friday.
Results and Interpretation:	**Negative:** Indicates no detectable Varicella IgG antibodies. A negative results indicate no current or previous infection with Varicella virus. Such individuals are presumed to be susceptible to primary infection. However, specimen taken too early during a primary infection may not have detectable levels of IgG antibody. If primary infection is suspected, another specimen (convalescent) should be taken in 8-14 days and tested concurrently in the same assay with the original (acute) specimen to look for seroconversion. If acute specimen is negative and convalescent specimen is positive, seroconversion has taken place and a primary varicella virus infection is indicated. **Equivocal:** Equivocal results are indeterminate. Patient may or may not have immunity to Varicella Virus. It is not acceptable proof of immunity. **Positive:** Indicates evidence of Varicella IgG antibodies. This suggests past or current infection with Varicella virus via acquired immunity or vaccination and probable protection from clinical infection (Immunity).
Additional Information:	For more information, see the CDC link at: https://www.cdc.gov/chickenpox/index.html https://www.cdc.gov/shingles/index.html
Purpose of Test:	For detection of IgG antibodies to Varicella virus. The test can be used to evaluate single sera for immune status.
Method:	Chemiluminescent Immunoassay (CLIA)
Interfering Substances:	Test results in an immunocompromised patients should be interpreted with caution.
Testing Site:	MDH Laboratories Administration, Central Laboratory 1770 Ashland Avenue, Baltimore, Maryland 21205
Comment:	A diagnosis should not be made on the basis of anti-Varicella results alone. Test results should be interpreted in conjunction with the clinical evaluation and the results of other diagnostic procedures. The antibody titer of a single serum specimen cannot be used to determine a recent infection. Paired samples (acute and convalescent) should be collected and tested concurrently to demonstrate seroconversion. Samples collected too early in the course of an infection may not have detectable levels of IgG. In such cases, a second sample may be collected after 2-7 weeks and tested concurrently with the original sample to look for seroconversion. A positive Varicella IgG test in neonates should be interpreted with caution since passively acquired maternal antibody can persist for up to 6 months.

TEST:	Varicella Antibody (IgM)
Synonym:	Anti-Varicella IgM; Varicella Zoster Virus/VZV antibody.
Laboratory/Phone:	Vaccine Preventable Disease/443-681-3889
Turnaround Time:	Serum
Specimen Required:	Serum
Specimen identification:	The specimen/sample must be properly labeled and include patient's name or unique patient/sample identifier matching the test requisition or electronic test order.
Specimen Volume (Optimum):	5 ml. (Whole blood) or 4 ml. (Serum)
Specimen Volume (Minimum):	3 ml. (Whole blood) or 2 ml. (Serum)
Collect:	Red-top vacutainer or Serum Separator ("Tiger" or gold top) vacutainer.
Form:	MDH Form #4677 Serological Testing (Order Forms: 443-681-3777 or form may be downloaded from MDH Laboratory website). **Write "VZV IgM" on form. Indicate specimen type using the "Specimen Code". Prior approval by MDH Epidemiology (410-767-6628) required.**
Packaging and Shipping*:	Specimens must be packaged in a triple packaging system to ensure that under normal conditions of transport they cannot break, be punctured or leak their contents (Refer to pages 9 & 10 for triple packing guidance). ***Refer to current Federal regulations for specific shipping requirements.**
Packaging and Shipping*:	Specimens must be packaged in a triple packaging system to ensure that under normal conditions of transport they cannot break, be punctured or leak their contents (Refer to pages 9 & 10 for triple packing guidance). ***Refer to current Federal regulations for specific shipping requirements.**
Transport Conditions:	Ambient temperature for specimens on the blood clot (whole blood specimens transported on ice packs are acceptable), separated serum at 2-8°C (refrigerated) or -20°C (frozen). Refrigerated specimen must be tested within 7 days of collection.
Specimen Rejection Criteria:	Discrepancy between name on tube and name on form, unlabeled specimen; hemolytic; lipemic; gross bacterial contamination. Specimens collected > 7 days prior to submission.
Availability:	Monday to Friday. **Test available only to MDH epidemiologists for outbreak investigations. Prior approval by MDH Epidemiology (410-767-6628) required.**
Results and Interpretation:	**Negative:** No detectable Varicella IgM antibodies. A negative result indicates no current infection with Varicella virus. However, specimens taken too early during a primary infection may not have detectable levels of IgM antibody. If a primary infection is suspected, another specimen should be taken within 7 days and tested concurrently in the same assay with the original specimen to look for seroconversion **Equivocal:** Equivocal specimens are borderline. Another specimen should be collected after 7 days and retested. **Positive:** Indicates evidence of Varicella IgM antibodies. This suggests primary or reactivated infection with Varicella.
Additional Information:	For more information, see the CDC link at: https://www.cdc.gov/chickenpox/index.html
Purpose of Test:	For detection of IgM antibodies to Varicella virus. **Test available only to MDH epidemiologists for outbreak investigations. Prior approval by MDH Epidemiology 410-767-6628) required.**
Method:	ELISA
Interfering Substances:	High anti-VZV IgG or Rheumatoid factor may cause false negative or false positive results. Test results in an immunocompromised patients should be interpreted with caution. Patients with autoimmune disease may present with false positive results. Test results in an immunocompromised patients should be interpreted with caution.
Testing Site:	MDH Laboratories Administration, Central Laboratory 1770 Ashland Avenue, Baltimore, Maryland 21205
Comment:	Results of the Varicella IgM ELISA are not by themselves diagnostic and should be interpreted in light of the patient's clinical condition and results of other diagnostic procedures. Samples taken too early during the course of a primary infection may not have detectable levels of Varicella specific IgM. A negative result does not rule out a primary infection with rubella virus. This assay cannot distinguish the difference between vaccine-induced antibody and antibody resulting from a natural infection. The performance of the Varicella IgM ELISA has not been validated using neonatal samples.

TEST:	Varicella Zoster Virus (VZV) Viral Culture
Synonym:	Varicella Zoster Virus (VZV) culture: refer to instructions for **Virus Culture**.
Laboratory/Phone:	Virology: 443-681-3934

TEST:	***Vibrio* culture**
Synonym:	*Vibrio spp.* Enteric Culture: Refer to instructions for **Enteric Culture, Routine (Salmonella, Shigella, Campylobacter, and Shiga toxins–producing *E. coli*)**.
Laboratory/Phone:	Microbiology-Enterics 443-681-4570

TEST:	***Vibrio parahaemolyticus* culture**
Synonym:	*Vibrio spp.* Enteric Culture: Refer to instructions for **Enteric Culture, Routine (Salmonella, Shigella, Campylobacter, and Shiga toxins–producing *E. coli*)**.
Laboratory/Phone:	Microbiology-Enterics 443-681-4570

TEST:	Virus Culture
Synonym:	Viral Culture, Virus isolation for: Adenovirus, Cytomegalovirus (CMV), Enterovirus (including Echovirus, Coxsackie, and Polio), Herpes Simplex Virus (HSV Types 1 & 2), Influenza (Types A & B), Measles, Mumps, Parainfluenza (Types 1,2 & 3), Respiratory Syncytial Virus (RSV), Varicella Zoster Virus (VZV)
Laboratory/Phone:	Virology: 443-681-3934
Turnaround Time:	3-28 business days
Specimen Required:	One specimen per test requested, collected during the acute phase of the disease: blood, cerebrospinal fluid (CSF), skin lesion, eye, genital, mucosal, oral, upper and lower respiratory tract, stool, tissue/biopsy, urine
Specimen identification:	Specify the source of the specimen. Label container with patient's last name, first name, DOB, specimen type, date and time of collection.
Specimen Volume (Optimum):	Fluid: $\geq$ 1 ml Swab/tissue in viral transport media (VTM) Unpreserved fresh stool: 4 grams in sterile container
Specimen Volume (Minimum):	
Continued Next Page>	

Collect:	Specimen	Collect	Container
	CSF	Collect ≥ 2 ml aseptically.	Sterile container with leak-proof screw top lid.
	Eye	Collect aseptically and leave swab in VTM.	Viral transport media (VTM)
	Nasopharyngeal aspirate	Aspirate using #8 French catheter and trap	Sterile container with leak-proof screw top lid.
	Oral	Swab inner side of both cheeks behind upper molars and floor of mouth, including any ulcerated areas. Leave swab in VTM.	Viral transport media (VTM)
	Buccal	Swab inner side of both cheeks. Leave swab in VTM	Viral transport media (VTM) Notify MD Department of Health Epidemiology and send to laboratory ASAP after collection.
	Rectal	Insert swab at least 5 cm into orifice and rotate the swab. Leave swab in VTM.	Viral transport media (VTM)
	Stool	4-8 grams	Sterile container with leak-proof screw top lid.
	Throat	Swab tonsillar area and back of pharynx. Leave swab in VTM.	Viral transport media (VTM)
	Tissue	Collect biopsy and autopsy specimens aseptically	Sterile container with leak-proof screw top lid. If possible, add viral transport media.
	Urine	Clean catch, midstream urine	Sterile container with leak-proof screw top lid. For recovery of CMV, send to lab within 2-3 hours after collection on cold ice packs. DO NOT FREEZE!
Form:	MDH Form #4676 Infectious Agents: Culture/Detection (Order Forms: 443-681-3777 or form may be downloaded from MDH Laboratory website). **Indicate the specific virus suspected by placing a "Specimen Code' in the box next to the test. Provide clinical history, age of patient, relevant vaccination history, and specimen collection date.**		
Packaging and Shipping*:	Specimens must be packaged in a triple packaging system to ensure that under normal conditions of transport they cannot break, be punctured or leak their contents (Refer to pages 9 & 10 for triple packing guidance). ***Refer to current Federal regulations for specific shipping requirements.**		
Transport Conditions:	Stool specimens for enterovirus (Polio, Coxsackie, and Echovirus) should be shipped on refrigerated cold packs. Specimens for CMV cultures should be delivered refrigerated on cold packs immediately after collection (within 2-3 hours). **DO NOT FREEZE specimens for CMV culture.** Varicella-Zoster Virus, Influenza, Parainfluenza, Adenovirus, Measles, Mumps, Respiratory Syncytial Virus, and HSV cultures should be shipped on cold packs or kept frozen using dry ice. Any specimen for virus isolation other than those previously listed should be shipped frozen in a dry ice outfit. Seal the specimen container tightly to prevent ingress of toxic carbon dioxide vapors. Whenever possible, submit both acute and convalescent sera from patients for whom virus isolation tests are being requested.		
Specimen Rejection Criteria:	Bacterial swab, dry swab, swab with wooden shaft, calcium alginate swab, leaking container, expired transport media, unlabeled specimen, mismatch between labeling of specimen and test request form, specimen held at room temperature more than 2 hours, refrigerated for more than 3 days or frozen CMV urine specimens.		
Availability:	Monday through Friday.		
Results and Interpretation:	Positive: (Name of virus) isolated. Negative: No viruses isolated.		
Additional Information:			

Continued Next Page>

Purpose of Test:	Virus isolation to determine probable cause of infection and aid in the diagnosis of viral disease or to further characterization for epidemiological purposes.
Method:	Cell culture, viruses detected by cytopathic effect and/or antibody/fluorescent staining.
Interfering Substances:	
Testing Site:	MD Department of Health Laboratories Administration, Central Laboratory 1770 Ashland Avenue, Baltimore, Maryland 21205
Comment:	The two most important steps in viral isolation are specimen collection and specimen transportation. Since the detection of viruses is more likely to be achieved early in the illness, specimens for most viral diseases should be collected as soon as a viral infection is suspected and submitted to the laboratory as soon as possible. Submission of adequate specimen and patient history is essential. A blanket request for "Virus Study" should not be submitted. Information must specify the group of viruses suspected. Please indicate suspected infecting agent as well as additional information such as chief symptoms, clinical test results, epidemiology data, immunizations, etc. This will guide the laboratory in choosing which virological procedures and host systems should be inoculated. Since many viruses die rapidly once they have been separated from host tissue, specimens must be delivered to the Virology Laboratory immediately after collection. Isolation of a virus from clinical material does not establish an etiologic diagnosis per se. The significance of such a virus depends upon the source of the isolate. For example, isolation of a virus from the brain in encephalitis or from the spinal fluid in aseptic meningitis provides direct evidence of an etiological association. Likewise isolation of an influenza virus from throat washings of a patient ill with an influenza-like disease strongly suggests that the virus is the causative agent since this virus is only isolated from throat washings in acute influenza. In contrast, the isolation of an enteric virus from the stool of a patient suffering from aseptic meningitis does not by itself indicate an etiological relationship, as enteroviruses are sometimes found in the feces of healthy individuals. Occasionally a virus other than the one ordered is detected since any reaction in the host system is investigated. A negative viral culture report does not preclude the possibility of the suspect virus or another virus being involved in the patient's disease. The cultures may be negative because of specimen procurement problems, such as prolonged transportation or processing delays, procurement of sample too late in the course of the disease, or inability of some viruses or viral strains to adapt to growth in the tissue culture cell lines selected. For a more rapid diagnosis, Real-Time PCR detection tests for Influenza A virus, Influenza B virus, and Herpes simplex virus I and II are available.

TEST:	**VRE (rule out)**
Synonym:	Vancomycin-Resistant *Enterococcus* culture; rule out Vancomycin-Resistant *Enterococcus faecium*; rule out Vancomycin-Resistant *Enterococcus faecalis*
Laboratory/Phone:	Microbiology 443-681-3952
Turnaround Time [from specimen receipt in the Laboratory]:	2-3 days
Specimen Required:	Rectal swab; perianal swab, stool
Specimen Identification:	Specimen should be labeled with patient's last and first name, patient's address, DOB, specimen type/source, and the date and time of collection. The specimen/sample must be properly labeled and match the test requisition or electronic test order.
Specimen Volume (Optimum):	One (1) swab
Specimen Volume (Minimum):	N/A
Collect:	Culturette tube with transport medium
Form:	MDH Form #4676 Infectious Agents: Culture/Detection (Order Forms: 443-681-3777 or form may be downloaded from MDH Laboratory website). **Indicate specimen type using the "Specimen Code" on form.**
Packaging and Shipping*:	Specimens must be packaged in a triple packaging system to ensure that under normal conditions of transport they cannot break, be punctured or leak their contents (Refer to pages 9 & 10 for triple packing guidance). ***Refer to current Federal regulations for specific shipping requirements.**
Transport Conditions:	Store and ship at room temperature, ship as quickly as possible.
Continued Next Page>	

Specimen Rejection Criteria:	The following rejection criteria are designed to prevent the reporting of inaccurate results and to avoid misleading information that might lead to misdiagnosis and inappropriate therapy. A request for a new specimen will provide appropriate materials and clinically relevant information to support good patient care. ▪ Unlabeled or improperly labeled specimen ▪ Non-sterile or leaking container ▪ Inappropriate specimen transport conditions ▪ Illegible, or no submitter information on the request form ▪ Mismatched form and specimen ▪ Broken specimen/sample container ▪ The wrong specimen for test request ▪ Inappropriate outfit for requested test ▪ Illegible or no patient information on the specimen ▪ Expired transport media ▪ Specimen received after prolonged delay (usually more than 72 hours)
Availability:	Monday through Friday
Results and Interpretation:	VRE isolated and identified, Vancomycin resistance confirmed.
Reference Range:	No VRE detected
Additional Information:	N/A
Purpose of Test:	Detect the presence of VRE
Method:	N/A
Interfering Substances:	N/A
Testing Site:	MD Department of Health Laboratories Administration, Central Laboratory 1770 Ashland Avenue, Baltimore, Maryland 21205
Comment:	N/A

TEST:	**West Nile Virus IgM Equine EIA (Equine specimen)**
Synonym:	**Ar**thropod-**bo**rne **virus:** WNV (West Nile Virus)
Laboratory/Phone:	Virology: 443-681-3937
Turnaround Time:	7 business days
Specimen Required:	Serum (blood);CSF
Specimen identification:	Label container with horse's name, specimen type, date and time of collection.
Specimen Volume (Optimum):	2 ml serum; 2ml CSF
Specimen Volume (Minimum):	1 ml serum; 0.5 ml CSF
Collect:	Red top vacuum tube, transfer serum to sterile tube: CSF in sterile container with leak-proof cap.
Request Form:	Equine Arbovirus Testing Form [Order: 443-681-3777] **For testing to be initiated, the ANIMAL INFORMATION box on the form must be filled out completely.**
Packaging and Shipping*:	Specimens must be packaged in a triple packaging system to ensure that under normal conditions of transport they cannot break, be punctured or leak their contents (Refer to pages 9 & 10 for triple packing guidance). ***Refer to current Federal regulations for specific shipping requirements.**
Transport Conditions:	Store refrigerated and ship on cold packs in a cooler. If shipping is delayed beyond 48 hours, CSF must be frozen at -20°C and shipped on dry ice.
Specimen Rejection Criteria:	Grossly hemolyzed specimens, unlabeled specimen, leaking container, duplicate specimen type (e.g., two serum specimens collected on the same day-one tube will not be tested), and mismatch between labeling of specimen and test request form.
Availability:	Monday through Friday.
Results and Interpretation:	IgM: Negative, High Background, Equivocal, Positive Serum and CSF samples that tests positive for IgM is consistent with acute WNV infection
Additional Information:	The term "Arbovirus" has no taxonomic significance, but is a shortened name given to viruses that are transmitted by blood feeding arthropods (mosquitoes, ticks, etc.). For more information, see the CDC link at: http://www.cdc.gov/ncidod/dvbid/arbor/arbdet.htm
Purpose of Test:	
Method:	ELISA
Interfering Substances:	
Testing Site:	MD Department of Health Laboratories Administration, Central Laboratory 1770 Ashland Avenue, Baltimore, Maryland 21205

Continued Next Page>

Comment:	

TEST:	West Nile Virus (WNV) (Arbovirus Endemic Panel)
Synonym:	**Ar**thropod-**bo**rne **virus: WNV (West Nile Virus)** Refer to instructions for **Arbovirus Endemic Panel**.
Laboratory/Phone:	Virology: 443-681-3936/3931

TEST:	Western Equine Encephalitis (CDC Referral)
Synonym:	**Ar**thropod-**bo**rne **virus**: Western Equine Encephalitis (WEE)
Laboratory/Phone:	Virology: 443-681-3936/3931
Turnaround Time:	3 weeks
Specimen Required:	Serum (blood)
Specimen identification:	The specimen/sample must be properly labeled and include: 1. The patient's name or unique patient/sample identifier matching the test requisition or electronic test order, 2. If appropriate, the date and time of specimen/sample collection, and 3. Any additional information relevant and necessary for the test.
Specimen Volume (Optimum):	2 ml serum
Specimen Volume (Minimum):	1 ml serum
Collect:	Red top vacutainer tube, transfer serum to sterile tube
Request Form:	MDH Form #4677 Serological Testing (Order Forms: 443-681-3777 or form may be downloaded from MDH Laboratory website). Indicate specimen type using the "Specimen Code" on form. Write "S" for serum in the "Other Tests Request" and indicate Western Equine Encephalitis. **For testing to be initiated the following information MUST be provided: date of onset, date specimen collected, travel history, and flavivirus vaccination history.** Also please provide: patient's date of birth, diagnosis, symptoms, fatality, and whether patient is immunocompromised.
Packaging and Shipping*:	Specimens must be packaged in a triple packaging system to ensure that under normal conditions of transport they cannot break, be punctured or leak their contents (Refer to pages 9 & 10 for triple packing guidance). ***Refer to current Federal regulations for specific shipping requirements.**
Transport Conditions:	Store refrigerated and ship on cold packs in a cooler. If shipping is delayed beyond 48 hours, specimen can be frozen at -20°C and shipped on dry ice.
Specimen Rejection Criteria:	Grossly hemolyzed specimen, unlabeled specimen, leaking container, mismatch between labeling of specimen and test request form/electronic test order, and does not meet epidemiological criteria required for testing (e.g. travel history, etc.)
Availability:	Specimens shipped to the CDC Monday-Wednesday.
Results and Interpretation:	Serum that tests positive for IgM and negative for IgG is consistent with acute Western Equine Encephalitis infection. A positive Western Equine Encephalitis EIA is confirmed by PRNT (plaque reduction neutralization). A positive IgG antibody and a negative IgM antibody are consistent with infection in the distant past and are not consistent with acute infection.
Additional Information:	The term "Arbovirus" has no taxonomic significance, but is a shortened name given to viruses that are transmitted by blood feeding arthropods (mosquitoes, ticks, etc.). Arboviruses that cause human encephalitis are members of three virus families: The Togaviridae (genus Alphavirus), Flaviviridae, and Bunyaviridae. For more information, see the CDC link at: https://www.cdc.gov/ncezid/dvbd/ Patients with travel history supporting suspicion of other arboviruses will be sent to the CDC for testing.
Purpose of Test:	For the presumptive detection of antibodies to Western Equine Encephalitis Virus. Confirmatory testing by PRNT may be required.
Method:	EIA (Screening) & PRNT (Plaque Reduction Neutralization Test) referral to the Centers for Disease Control and Prevention (CDC).
Interfering Substances:	

Continued Next Page>

Processing Site for CDC referral:	MD Department of Health Laboratories Administration, Central Laboratory 1770 Ashland Avenue, Baltimore, Maryland 21205
Comment:	Other Arboviral testing not available at the state lab will be forwarded to the CDC based on patient's travel history and onset date.

TEST:	**Whooping Cough**
Synonym:	B. pertussis, pertussis, Whooping Cough **Refer to instructions for Bordetella pertussis PCR and Culture.**
Laboratory/Phone:	Molecular Biology: 443-681-3924; Microbiology 443-681-3952

TEST:	**Woolsorters' Disease**
Synonym:	*Bacillus anthracis*, Cutaneous Anthrax: Refer to instructions for **Anthrax, Cutaneous (Woolsorters' disease)**.
Laboratory/Phone:	Office of Laboratory Emergency Preparedness and Response: **410-925-3121 (24/7 emergency contact number)** Select Agents Microbiology Laboratory: 443-681-3954 Division of Microbiology Laboratory: 443-681-3952

TEST:	**Yellow Fever (CDC Referral)** CDC test available based on patient's travel history.
Synonym:	**Ar**thropod-**bo**rne **virus: Bunyavirus**
Laboratory/Phone:	Virology: 443-681-3936/3931
Turnaround Time:	3 weeks (CDC Referral)
Specimen Required:	Serum
Specimen identification:	The specimen/sample must be properly labeled and include: 1. The patient's name or unique patient/sample identifier matching the test requisition or electronic test order, 2. If appropriate, the date and time of specimen/sample collection, and 3. Any additional information relevant and necessary for the test.
Specimen Volume (Optimum):	2 ml serum
Specimen Volume (Minimum):	1 ml serum
Collect:	Red top vacutainer tube, transfer serum to sterile tube
Request Form:	MDH Form #4677 Serological Testing (Order Forms: 443-681-3777 or form may be downloaded from MDH Laboratory website). Indicate specimen type using the "Specimen Code" on form. Write "S" for serum in the "Other Tests Request" and indicate Yellow Fever. **For testing to be initiated, the following information MUST be provided: date of onset, date specimen collected, travel history, and flavivirus vaccination history.** Also please provide: patient's date of birth, diagnosis, symptoms, fatality, and whether patient is immunocompromised.
Packaging and Shipping*:	Specimens must be packaged in a triple packaging system to ensure that under normal conditions of transport they cannot break, be punctured or leak their contents (Refer to pages 9 & 10 for triple packing guidance). ***Refer to current Federal regulations for specific shipping requirements.**
Transport Conditions:	Store refrigerated and ship on cold packs in a cooler. If shipping is delayed beyond 48 hours, specimen can be frozen at -20°C and shipped on dry ice.
Specimen Rejection Criteria:	Grossly hemolyzed specimen, unlabeled specimen, leaking container, mismatch between labeling of specimen and test request form/electronic test order, and does not meet epidemiological criteria required for testing (e.g. travel history, etc.)
Availability:	Specimens shipped to the CDC Monday-Wednesday.
Results and Interpretation:	Serum that tests positive for IgM and negative for IgG is consistent with acute Yellow Fever infection. All positive Yellow Fever EIA are confirmed by PRNT (plaque reduction neutralization). A positive IgG antibody and a negative IgM antibody are consistent with infection in the distant past and are not consistent with acute infection.

Continued Next Page>

Additional Information:	The term "Arbovirus" has no taxonomic significance, but is a shortened name given to viruses that are transmitted by blood feeding arthropods (mosquitoes, ticks, etc.). Arboviruses that cause human encephalitis are members of three virus families: The Togaviridae (genus Alphavirus), Flaviviridae, and Bunyaviridae. For more information, see the CDC link at: https://www.cdc.gov/ncezid/dvbd/ Patients with travel history supporting suspicion of other arboviruses will be sent to the CDC for testing.
Purpose of Test:	Detection of Yellow Fever Virus antibodies.
Method:	EIA (Screening) & PRNT (Plaque Reduction Neutralization Test) referral to the Centers for Disease Control and Prevention (CDC).
Interfering Substances:	
Processing Site for CDC referral:	MD Department of Health Laboratories Administration, Central Laboratory 1770 Ashland Avenue, Baltimore, Maryland 21205
Comment:	Other Arboviral testing not available at the state lab will be forwarded to the CDC based on patient's travel history and onset date.

TEST:	***Yersinia* culture**
Synonym:	*Yersinia* stool culture: Refer to instructions for **Enteric Culture, Routine**.
Laboratory/Phone:	Microbiology-Enterics 443-681-4570

TEST:	***Yersinia enterocolitica***
Synonym:	*Yersinia enterocolitica* culture: Refer to instructions for **Enteric Culture, Routine**.
Laboratory/Phone:	Microbiology-Enterics 443-681-4570

TEST:	***Yersinia pestis***
Synonym:	Plague
Laboratory/Phone:	Office of Laboratory Emergency Preparedness and Response: **410-925-3121 (24/7 emergency contact number)** Select Agents Microbiology Laboratory: 443-681-3954 Division of Microbiology Laboratory: 443-681-3952
Turnaround Time [from specimen receipt in the Laboratory]:	3 -6 days
Specimen Required:	1. Lower respiratory tract (pneumonic): Bronchial wash or transtracheal aspirate (>1 ml). Sputum may be examined but this is not advised because of contamination by normal throat flora. 2. Blood (septicemia): Collect appropriate blood volume and number of sets per established laboratory protocol. NOTE: In suspected cases of plague, an additional blood or broth culture (general nutrient broth) should be incubated at room temperature (22-28°C), the temperature at which *Y. pestis* grows faster. 3. Aspirate of involved tissue (bubonic) or biopsied specimen: Liver, spleen, bone marrow, lung. NOTE: Aspirates may yield little material; therefore, a sterile saline flush may be needed to obtain an adequate amount of specimen. Syringe and needle of aspirated sample should be capped, secured by tape, and sent to the Laboratory. 4. Isolate
Specimen Identification:	Specimen should be labeled with patient's last and first name, patient's address, DOB, specimen type/source, and the date and time of collection.
Specimen Volume (Optimum):	N/A
Specimen Volume (Minimum):	N/A

Continued Next Page>

Collect:	1. Respiratory/sputum: Bronchial wash or transtracheal aspirate (>1.0 ml). 2. Blood: Collect appropriate blood volume and number of sets as per routine laboratory protocol. 3. Tissue aspirate/biopsy specimen: Add several drops of sterile saline to keep tissue moist. 4. Isolate: Pure culture, 24 hours old, growing on a sheep blood agar plate or slant.
Form:	MDH Form #4676 Infectious Agents: Culture/Detection (Order Forms: 443-681-3777 or form may be downloaded from MDH Laboratory website). **Indicate specimen type using the "Specimen Code" on form.**
Packaging and Shipping*:	Specimens must be packaged in a triple packaging system to ensure that under normal conditions of transport they cannot break, be punctured or leak their contents (Refer to pages 9 & 10 for triple packing guidance). ***Refer to current Federal regulations for specific shipping requirements.**
Transport Conditions:	1. Respiratory/sputum: Transport at room temperature. If it is known that the material will be transported from 2-24 hours after collection, then store container and transport at 2-8°C. 2. Blood: Transport at room temperature. Hold them at ambient temperature until they are incubated. DO NOT REFRIGERATE. 3. Tissue aspirate/biopsy specimen: Transport the sample at room temperature for immediate processing. Keep the specimen chilled if processing of the specimen will be delayed. 4. Isolate: Transport the specimen at room temperature on a sealed sheep blood agar plate or slant.
Specimen Rejection Criteria:	The following rejection criteria are designed to prevent the reporting of inaccurate results and to avoid misleading information that might lead to misdiagnosis and inappropriate therapy. A request for a new specimen will provide appropriate materials and clinically relevant information to support good patient care. ▪ Unlabeled or improperly labeled specimen ▪ Non-sterile or leaking container ▪ Inappropriate specimen transport conditions ▪ Illegible, or no submitter information on the request form ▪ Mismatched form and specimen ▪ Broken specimen/sample container ▪ The wrong specimen for test request ▪ Inappropriate outfit for requested test ▪ Illegible or no patient information on the specimen ▪ Expired transport media
Availability:	24 hours/day, 7 days/week
Results and Interpretation:	Yersinia pestis isolated/detected Yersinia pestis not found
Additional Information:	***Call 410-925-3121 before sending to the Laboratory.***
Purpose of Test:	To confirm the diagnosis of plague.
Method:	LRN Protocols
Interfering Substances:	N/A
Testing Site:	MD Department of Health Laboratories Administration, Central Laboratory 1770 Ashland Avenue, Baltimore, Maryland 21205
Comment:	***Call 410-925-3121 before sending to the Laboratory.***

TEST:	**Zika Virus IgM Serology** (Arbovirus Travel-Associated Panel)
Synonym:	**Ar**thropod-**bo**rne **virus: Zika Virus** Refer to instructions in Arbovirus Travel-Associated Panel
Laboratory/Phone:	443-681-3936/3931
Results and Interpretation:	**Negative:** No detectable IgM antibody to Zika virus. This result does not rule-out Zika virus infection. Lack of serologic evidence of infection may reflect that the specimen was collected prior to the development of an antibody response. If indicated, please submit another serum specimen collected greater than 14 days after onset of illness for further testing. **Other Flavivirus Positive:** Specimen tested presumptively positive for IgM antibody to another flavivirus. There still may be low levels of Zika IgM antibody present and follow up testing is required; the possibility of co-infections must also be considered. Confirmatory testing of positive serology test results will be performed by Plague Reduction Neutralization Test (PRNT). **Positive:** Specimen tested presumptively positive for IgM antibody to Zika virus. Presumptive positive confirmatory testing will be performed by Plague Reduction Neutralization Test (PRNT). Virus specific IgM antibodies can be detectable equal to or greater than four days after onset of illness. It has been reported that IgM antibodies typically persist for approximately 2-12 weeks.
Additional Information:	https://www.cdc.gov/zika/index.html
Comment:	The results should not be used as the sole means of clinical diagnosis, treatment, or for patient management. Clinical correlation is required. Results from immunocompromised patients must be interpreted with caution. Single acute-phase specimen can be inconclusive. Cross-reactivity with other flaviviruses including Dengue virus can occur.

E. GUIDE TO INTERPRETATION OF RETROVIROLOGY SEROLOGICAL TESTS

RETROVIRUSES	NORMAL/SIGNIFICANT RESULTS
Human Immunodeficiency Viruses (HIV)	Reactive results indicate presence of HIV antigen or antibody in serum/plasma. All screening test reactive specimens undergo testing using the Geenius HIV 1/2 Supplemental Assay for differentiation of HIV-1 and HIV-2 antibodies. An In-house developed HIV-1 NAAT assay is performed on the specimens that test reactive by the HIV antigen/ antibody screening test but are not confirmed as antibody positive in the Geenius assay.

F. GUIDE TO INTERPRETATION OF HEREDITARY DISORDERS

F.1.TESTS	SIGNIFICANT RESULTS

F.1.a. Galactose 1-Phosphate uridyl Transferase (GALT)

1.) < 7 days old

a.) Normal	Presence of enzyme activity
b.) Abnormal	Absence of enzyme activity

2.) ≥ 7 days old

a.) Normal	Presence of enzyme activity
b.) Abnormal	Absence of enzyme activity

F.1.b. Total Galactose

1.) < 7 days old

a.) Normal	Less than 10 mg/dL
b.) Borderline	10 - 20 mg/dL
c.) Abnormal	20, 40, 60, 80, or greater mg/dL >40 mg/dL with abnormal GALT or >80 mg/dL = neonatal emergency

2.) ≥ 7 days old

a.) Normal	Less than 10 mg/dL
b.) Borderline	10 - 20 mg/dL
c.) Abnormal	20, 40, 60, 80, or greater mg/dL >40 mg/dL with abnormal GALT or >80 mg/dL = neonatal emergency

F1.c. Biotinidase

1.) < 7 days old

a.) Normal	Presence of enzyme activity
b.) Abnormal	Lack of enzyme activity

2.) ≥ 7 days old

a.) Normal	Presence enzyme activity
b.) Abnormal	Lack of enzyme activity

F.1.d. Thyroxine

1.) < 7 days old

a.) Normal	≥ 6.5 µg/dL
b.) Borderline	3.0 – 6.49 µg/dL
c.) Abnormal	2.0 – 2.9 or < 2.0 µg/dL

2.) ≥ 7 days old

a.) Normal	≥ 4.0 µg/dL
b.) Borderline	3.0 – 3.9 µg/dL
c.) Abnormal	2.0 – 2.9 or < 2.0 µg/dL

F.1.e. TSH

1.) < 7 days old

a.) Normal	≤ 20 µIU/mL
b.) Borderline	21 - 40 µIU/mL
c.) Abnormal	≥ 40 µIU/mL

2.) ≥ 7 days old

a.) Normal	≤ 20 µIU/mL
b.) Borderline	21 - 40 µIU/mL
c.) Abnormal	≥ 40 µIU/mL

F.1.f. Hemoglobin

1.) < 7 days old

a.) Normal	FA hemoglobins or AF
b.) Trait	FAS, FAC, FAV, ACF, ASF, AVF, FA(C), FA(S), FACV, FASV
c.) Disease	FS, FC, FSC, F, FV, FSV, FCV, FSA, FVA

1.) ≥ 7 days old

a.) Normal	FA hemoglobins or AF
b.) Trait	FAS, FAC, FAV, ACF, ASF, AVF, FA(C), FA(S), FACV, FASV
c.) Disease	FS, FC, FSC, F, FV, FSV, FCV, FSA, FVA

F.1.g. 17 Hydroxy Progesterone

1.) < 7 days old

a.) Normal	Varies with weight. Call laboratory at 443-681-3900
2.) ≥ 7 days old	Same as above

F.1.h. Immuno Reactive Trypsinogen

1.) < 7 days old

a.) Normal	<60 ng / mL
b.) Borderline	≥ 60 ng / mL
c.) Abnormal	≥ 200 ng / mL
d.) Invalid	< 1500 grams Weight

2.) ≥ 7 days old.

a.) Normal	< 60 ng / mL

b.) Borderline	≥ 60 ng / mL
b.) Abnormal	≥ 200 ng / mL
c.) Invalid	< 1500 grams Weight

F.1.i. Cystic Fibrosis (CF) mutational analysis of CFTR

1.) < 7 days old

a.) 0 mutations	Low probability of CF
b.) 1 mutation	Increased potential for CF, diagnostic testing required
c.) >1 mutation	High probability of developing CF

2.) ≥ 7 days old

a.) 0 mutations	Low probability of CF
b.) 1 mutation	Increased potential for CF, diagnostic testing required
c.) >1 mutation	High probability of developing CF

F.1.j. T-Cell Receptor Excision Circle (TREC)

1.) < 7 days old

a.) Normal	Normal levels of TREC DNA detected
b.) Inconclusive	Insufficient DNA to measure TREC levels in the specimen
c.) Abnormal	Low levels of TREC DNA could indicate immunodeficiency
d.) Critical	Extremely low TREC DNA levels could indicate immunodeficiency

2.) ≥ 7 days old

a.) Normal	Normal levels of TREC DNA detected
b.) Inconclusive	Insufficient DNA to measure TREC levels in the specimen
c.) Abnormal	Low levels of TREC DNA could indicate immunodeficiency
d.) Critical	Extremely low TREC DNA levels could indicate immunodeficiency

F.1.k. Survival of Muscle Neuron 1 (SMN1)

1.) < 7 days old

a.) Normal	DNA from exon 7 of SMN1 detected
b.) Inconclusive	Insufficient DNA in the specimen to measure DNA from exon 7 of SMN1.
c.) Critical	DNA from exon 7 of SMN1 not detected, could indicate Spinal Muscular Atrophy

2.) ≥ 7 days old

a.) Normal DNA from exon 7 of SMN1 detected

b.) Inconclusive Insufficient DNA in the specimen to measure DNA from exon 7 of SMN1.

c.) Critical DNA from exon 7 of SMN1 not detected, could indicate Spinal Muscular Atrophy

F.1.l. Lysosomal Storage Disorder (LSD) Enzymes

Enzyme Activity measured for: Acid Alpha-Glucosidase (GAA), Alpha-L-iduronidase (IDUA), and alpha-galactosidase A (GLA) (µmol/L/hr)

1.) < 7 days old

a.) Normal Greater than the cutoff

b.) Abnormal Less than the cutoff

c.) Inconclusive 2 or more LSD enzymes are below the cutoff

d.) Invalid Age at collection <24 hours and/or gestational age <34 weeks and/or weight < 2000g

2.) ≥ 7 days old

a.) Normal Greater than the cutoff

b.) Abnormal Less than the cutoff

c.) Inconclusive 2 or more LSD enzymes are below the cutoff

d.) Invalid Gestational age <34 weeks and/or weight < 2000g

F.2. GUIDE TO INTERPRETATION OF METABOLIC DISORDERS

ANALYTE	**NORMAL RESULT**		**SIGNIFICANT RESULT**	
	0-6 DAYS OLD	≥ 7 DAYS OLD	**0-6 DAYS OLD**	**> 7 DAYS OLD**
Arginine	≤ 70 µM	≤ 80 µM	> 70 µM	> 80 µM
Citrulline	≤ 40 µM	≤ 70 µM	> 40 µM	> 70 µM
Valine	≤ 400 µM	≤ 400 µM	NA	NA
Leucine	≤ 275 µM	≤ 305 µM	> 275 µM	> 305 µM
Methionine	≤ 75 µM	≤ 80 µM	> 75 µM	> 80 µM
Phenylalanine	≤ 120 µM	≤ 120 µM	> 150 µM	> 150 µM
Tyrosine	≤ 300 µM	≤ 300 µM	> 300 µM	> 300 µM
Acylcarnitine Profile (for 11 Organic Acidemias and 9 Fatty Acid Oxidation Disorders)	Contact Newborn Screening	Contact Newborn Screening	Contact Newborn Screening	Contact Newborn Screening

F.3. CLINICAL AND HEMOTOLOGIC ASPECTS OF SOME HEMOGLOBINOPATHIES

TRAIT 1	HB TYPES	CLINICAL SEVERITY	RED-CELL MORPHOLOGY	ANEMIA	SICKLING
Hb-S trait	A + S	+	Normal	+	+
Hb-C trait	A + C	-	Normal	-	-
Hb-E trait	A + E	-	Normal	+	-
DISEASE 2	**HB TYPES**	**CLINICAL SEVERITY**	**RED-CELL MORPHOLOGY**	**ANEMIA**	**SICKLING**
Homozygous					
Sickle cell anemia	S + S	+ + +	Normocytic Normochromic	+ + +	+
HbC disease	C + C	+	Slightly microcytic normochromic	+	-
HbD disease	D + D	-	Microcrytic normochromic	-	-
HbE disease	E + E	+	Microcytic normochromic	+	-
Mixed Heterozygous					
Sickle Cell HbC Disease	C + S (F*)	- to + + +	Slightly microcytic, slightly hypochromic	- to + + +	+
Sickle Cell HbD Disease	D + S (F*)	+ +		+ + +	+
Thalassemia Syndrome					
Thalassemia major	A + F	+ + + +	Microcytic hypochromic	+ + + +	-
Thalassemia HbS Disease	S + F + A	+ to + + + +	Microcytic hypochromic	+ + to + + + +	+
Thalassemia HbC Disease	A + C (F*)	+ to + +	Microcytic hypochromic	- to	-
Thalassemia HbE Disease	E + F	+ to + + + +	Microcytic hypochromic	+ to + + + +	-

References (to “Clinical and Hemotologic Aspects of Some Hemoglobinopathies”)
[1] Nurembgerg, S.T. Electrophoreseis, F. A. David Co. Philadelphia. 1966. p. 127
[2] Modified from Chernoff (1958)
* F may be present

F.4. COMPARISON OF IRON-DEFICIENCY ANEMIA AND THALASSEMIA

PARAMETER	IRON-DEFICIENCY ANEMIA	BETA-THALASSEMIA MINOR
RBC	decreased	normal to increased
Hemoglobin	decreased	decreased
Hematocrit	decreased	decreased
Mean Corpuscular Volume (MCV) and Mean Corpuscular Hemoglobin (MCH)	decreased	decreased
Mean Corpuscular Hemoglobin Concentration (MCHC)	decreased	normal
Serum Iron	decreased	normal to increased
Total iron Binding Capacity (TIBC)	decreased	normal to increased
Response to parenteral iron administration	very rapid	negligible

G. COMMON VIRAL AND RICKETTSIAL CLINICAL SYNDROMES

As a guide to the physician in submitting specimens for viral and rickettsial studies, the following chart has been included. It lists the common clinical syndromes, viruses which have been associated with each, and the clinical materials which should be collected. Every attempt should be made to obtain all of the materials listed for each illness, since this will greatly increase the chances of the laboratory in establishing an etiologic diagnosis.

MANIFESTATION	AGENT	SOURCE OF SPECIMEN	
		CLINICAL	AUTOPSY
G.1. CARDIOVASCULAR			
a. Myocarditis and Pericarditis	Enteroviruses: (including Coxsackie A), (types 4, 14, 16) B-1 – B-5	Throat swab/washing Feces Pericardial fluid	Blood Pericardial fluid
MANIFESTATION	**AGENT**	**SOURCE OF SPECIMEN**	
		CLINICAL	**AUTOPSY**

G.2. CENTRAL NERVOUS SYSTEM (CNS)				
	a. Paralysis	Enteroviruses: Polioviruses types 1,2,3 Coxsackie A-7, A-9 ECHO types 2 and 9	Throat swab/washing CSF Feces	Brain Intestinal contents
	b. Aseptic meningitis and/or encephalitis	Enteroviruses: Poliovirus Coxsackie Group A and B ECHO viruses Herpes simplex	Throat swab/washing CSF Feces	Brain Intestinal contents
			Mouth swab CSF	Brain
		Mumps	Mouth swab of Swenson's ducts CSF Urine	Brain Parotid
		Arboviruses	Blood Throat CSF	Brain
		Lymphocytic choriomeningitis	Blood CSF	Brain
		Lymphogranuloma venereum	CSF Primary Lesion site	Brain Liver Spleen
		Rabies	See CDC Rabies Guidelines	See CDC Rabies Guidelines
		Adenoviruses	Throat swab CSF Feces	Brain
		Measles (Rubeola)	Blood CSF	Brain
	c. Guillain-Barré Syndrome	Coxsackie A ECHO viruses	Throat swab/washing CSF Feces	Brain cord
	d. Subacute sclerosing Pan encephalitis (Dawson's encephalitis)	Measles (Rubeola)	CSF Blood	Brain

MANIFESTATION	AGENT	SOURCE OF SPECIMEN	
		CLINICAL	AUTOPSY
G.3. EXANTHEMATOUS INFECTION			
a. Skin and Mucous Membrane			
(1.) Smallpox	Vaccinia variola	Crusts	Liver
(2.) Chickenpox	Varicella zoster	Throat swab/washing Vesicle fluid Scrapings from vesicle base	Spleen (Lung also for varicella)
(3.) Fever blisters	Herpes simplex	Mouth swab Vesicle fluid and scrapings	CNS
(4.) Herpangina	Enterovirus: Coxsackie A	Vesicle fluid Throat swab/washing Feces Vaginal swab	
(5.) Hand, foot and mouth disease	Enterovirus Coxsackie A	Vesicle fluid Throat swab/washing (types 5, 10, 16)	Feces
(6.) Dengue fever	Dengue virus (types 1-4)	Blood	Blood
b. Maculopapular Rash			
(1.) Enterovirus		Throat swab/washing Feces	
(2.) German measles	Rubella	Heparinized blood CSF Products of conception Throat swab/washing Urine	Lung Liver Spleen

MANIFESTATION	AGENT	SOURCE OF SPECIMEN	
		CLINICAL	AUTOPSY
G4. OCULAR (OPHTHALMIC DISEASE)			
a. Kerato-conjunctivitis	Adenoviruses (types 8, 19, and 37)	Eye swab	Throat swab/washing
b. Ocular Herpes	Herpes Simplex	Eye swab	CNS
c. Follicular Conjunctivitis	Adenoviruses (types 3, 7, and others)	Eye swab	Throat swab/washing Eye swab
d. Conjunctivitis	New Castle Disease Virus		Conjunctival scrapings
G.5. RESPIRATORY INFECTION			
a. Lower Tract			
(1.) Bronchitis Laryngotracheo bronchitis (Croup)	Influenza Parainfluenza Respiratory syncytial virus (infants)	Nasopharyngeal Aspirate Sputum	Lung Bronchial scrapings (for influenza, add spleen, liver, and/or kidney)
	Chlamydia	Sputum Pleural fluid Throat swab/washing	Lung Liver Spleen
	Adenoviruses	Sputum Nasopharyngeal Aspirate Feces	Lung Bronchial scrapings
	Enteroviruses	Throat swab/washing Feces	Intestinal contents
G.6. RICKETTSIAL INFECTIONS			
a. Rocky Mountain Spotted Fever	Rickettsia rickettsii	Blood	Liver Spleen
b. Ehrlichiosis	Ehrlichia chaffeensis	Blood	
c. Epidemic typhus	Rickettsia prowazekii	Blood	
d. Murine typhus	Rickettsia typhi	Blood	
e. Q Fever	Coxiella burnetii	Sputum Urine CSF Blood	Liver Spleen
f. Rickettsial pox	Rickettsia akari	Blood	Liver Spleen

MANIFESTATION		AGENT	SOURCE OF SPECIMEN	
			CLINICAL	AUTOPSY
G.7. SEXUALLY TRANSMITTED DISEASES (STD)				
	a. Acquired Immuo-Deficiency Syndrome (AIDS)	Human Immuno-Deficiency virus HIV1, HIV2	Whole blood	
	b. Genitourinary tract infection	Herpes Simplex 2	Lesion scraping Vaginal swab	
	c. Vulvovaginitis	Coxsackie B Herpes Simplex 2	Vaginal swab Lesion scraping	
	d. Lymphogranuloma venereum, cervicitis, urethritis	Chlamydia trachomatis	Fluid and pus Cervical swab Urethral swab Rectal swab	
G.8. SYSTEMIC				
		Cytomegalovirus	Urine, Saliva Throat swab/washing Heparinized blood CSF Lung Biopsy	Kidney Lung Liver Brain
		Adenoviruses	Throat swab/washing Sputum Feces Urine CSF	Intestinal contents Lung Brain Liver Kidney Heart
		Coxsackie B	Throat swab/washing CSF Feces, pleural, or as indicated	Brain Heart Lymph node Intestinal
MANIFESTATION		**AGENT**	**SOURCE OF SPECIMEN**	
			CLINICAL	**AUTOPSY**
G.9. MISCELLANEOUS				
	a. Infantile diarrhea	Coxsackie A (types 18, 20, 21, 22, 24)	Feces	
	b. Hepatitis	Enteroviruses (including Coxsackie A) (types 4, 9)	Throat swab/washing Feces Live	Intestinal contents

	c. Hemolytic-uremic Syndrome	Coxsackie A (type 4)	Throat swab/washing Feces	Lung Kidney Intestinal contents
	d. T cell leukemia	HTLV I, II	Heparinized blood	
	e. Gastroenteritis	ECHO Coxsackie B Rotaviruses Norovirus	Feces Throat swab/washing Vomitus	
	f. Orchitis and Epididymitis	Mumps Coxsackie	Urine Throat swab/washing Feces	Parotid
	g. Intussusception	Adenovirus	Feces Mesenteric lymph node	
	h. Colorado Tick Fever	CTF virus	Blood	
	i. Acute Infectious Lymphocytosis	Epstein-Barr virus (EB) Coxsackie-like virus	Blood	
	j. Post Perfusion Syndrome	Cytomegalovirus Epstein-Barr virus	Blood	

H. DIRECTORY OF LOCAL HEALTH DEPARTMENTS

HEALTH DEPARTMENT	ADDRESS	TELEPHONE	EMERGENCY/ AFTER HOURS PHONE#	FAX NO.
Allegany	P.O. Box 1745 12501-12503 Willowbrook Rd. Cumberland MD 21501-1745	301-759-5000	301-759-3060	301-777-5674
Anne Arundel	Health Services Buildings 3 Harry S. Truman Parkway Annapolis MD 21401	410-222-7375	410-222-7095	410-222-4436
Baltimore City	1001 East Fayette Street Baltimore MD 21202	410-396-4387	410-396-3100	410-396-1617
Baltimore County	Drumcastle Government Center 6401 York Road, 3rd Floor Baltimore MD 21212	410-887-2243	410-832-7182	410-377-5397
Calvert	P.O. Box 980 975 Solomons Island Rd Prince Frederick MD 20678	410-535-5400	443-532-5973	410-535-5285

HEALTH DEPARTMENT	ADDRESS	TELEPHONE	EMERGENCY/ AFTER HOURS PHONE#	FAX NO.
Caroline	403 South 7th Street Denton MD 21629	410-479-8030	Comm. Disease 443-786-1398 Rabies 410-479-2232	410-479-0554
Carroll	290 S. Center Street Westminster MD 21157	410-876-2152	410-386-2260	410-876-4988
Cecil	John M. Byers Health Center 401 Bow Street Elkton MD 21921	410-996-5550	410-996-5550	410-996-5179
Charles	4545 Crain Highway White Plains MD 20695-1050 Mailing Address: P.O. Box 1050 White Plains MD 20695	301-609-6900	301-932-2222	301-934-4632
Dorchester	3 Cedar Street Cambridge MD 21613	410-228-3223	410-228-3223	410-228-9319
Frederick	350 Montevue Lane Frederick MD 21702	301-600-1029	301-600-0311	301-600-3111
Garrett	1025 Memorial Drive Oakland MD 21550	301-334-7777	301-334-1930	301-334-7771
Harford	120 South Hays Street P.O. Box 797 Bel Air MD 21014-0797	410-838-1500	Comm. Disease 443-243-5726 Environ. Health 410-638-3400	410-638-4952
Howard	8930 Stanford Boulevard Columbia, MD 21045	410-313-1412	410-313-2929	410-313-6108
Kent	125 S. Lynchburg Street Chestertown MD 21620	410-778-1350	Comm. Disease 410-708-5611 Environ. Health 410-778-1371	410-778-7913
Montgomery	401 Hungerford Drive, 5th Floor Rockville MD 20850	240-777-1741	240-777-4000	301-279-1692
Prince George's	1701 McCormick Drive Largo MD 20774	301-883-7834 301-883-7879	301-883-4748 301-883-7879	301-883-7896
Queen Anne's	206 N. Commerce Street Centreville MD 21617	410-758-0720	410-758-3476 410-778-5173	410-758-2838
Somerset	7920 Crisfield Highway Westover MD 21871	443-523-1700	443-523-1750	410-651-5680
St. Mary's	21580 Peabody Street, P.O. Box 316 Leonardtown MD 20650	301-475-4330	301-475-8016	301-475-4350

HEALTH DEPARTMENT	ADDRESS	PHONE#	EMERGENCY PHONE#	FAX NO.
Talbot	100 S. Hanson Street Easton MD 21601	410-819-5600	410-822-0095	410-819-5690
Washington	1302 Pennsylvania Avenue Hagerstown MD 21742	240-313-3260	301-573-6375	240-313-3201
Wicomico	108 East Main Street Salisbury MD 21801	410-543-6930	410-543-6996	410-543-6975
Worcester	P.O. Box 249 6040 Public Landing RD. Snow Hill MD 21863	410-632-1100	410-632-1311	410-632-0906

I. ACRONYMS

AFB	acid fast bacillus
AFP	alpha fetoprotein
Ag	Antigen
BCK	branch chain ketoacids
CAH	congenital adrenal hyperplasia
CF	complement fixation
CHS	Childhood Screening
CMV	Cytomegalovirus
CSF	cerebrospinal fluid
DF	dark field
DFA	direct fluorescent antibody
EBNA	Epstein Barr virus nuclear antigen
EBV	Epstein Barr virus
EEE	Eastern Equine Encephalitis
EIA	enzyme linked immunosorbent assay
ELISA	enzyme linked immunosorbent assay
GALT	Galactose 1-phosphate uridyl transferase
HAVAb	Hepatitis A virus antibody
Hb	Hemoglobin
HIV	Human Immunodeficiency virus
HSV	Herpes Simplex virus
HTLV I/II	Human T Lymphocytic virus
IFA	indirect fluorescent antibody
IFA	Immunofluorescent antibody
IgG	Immunoglobulin G
IgM	Immunoglobulin M
IHA	indirect hemagglutination
IM	infectious mononucleosis
LCM	lymphocytic choriomeningitis

LIMS	Lab Information Management System
LT	lavender top tube
MAC	*Mycobacterium avium complex*
MCAD	medium chain acyl-dehydrogenase deficiency
MCHC	mean corpuscular hemoglobin concentration
mg/dL	milligram per deciliter
NBS	Newborn Screening
NP	nasopharyngeal
PCR	polymerase chain reaction
PFGE	pulsed-field gel electrophoresis
PKU	phenylketonuria
RFFIT	rapid fluorescent focus inhibition technique
RPR	rapid plasma reagin
RSV	Respiratory Syncytial virus
RT	red top tube
RT-PCR	Reverse-transcribed polymerase chain reaction
SPS	yellow blood collection tubes containing sodium polyanethol sulfonate
TIBC	total iron binding capacity
VIR-IMM	Virology Immunology Division
VCA	viral capsid antigen
VTM	viral transport media
VZV	Varicella-Zoster virus
WB	Western Blot
WEE	Western Equine encephalitis